BOOL
DINT
INT
LINT
REAL
SINT

Controller RC1756_DM
Controller Fault Handler
Power-Up Handler

Tasks

MainTask

MainProgram

Sample program to illustrate the commands and data types used with the Hardy 1756-FC module.

MainRoutine

Vendor/ Address/ Phone Hardy Instruments 3860 Calle Fortunada, San Diego, CA , 92123-1825 (800) 821-5831 USA Sample is for demonstration purposes only, showing an example of reading and writing commands and values to and from the module. Main routine with bits tro trigger the start of all other routines.

Clear_Total

Routine to clear Total

cmd_select

This routine will allow the user to trigger the commands to be sent to the module. Each of the first rungs, 0 – 12, will trigger a different command. Each rung will move a command number into tag cmd to run the command.

control_IO

new_setpt

Sets a new rate setpoint

Read_Cal_Values

Reads the calibration values from the module.

read_param_msg

Reads the parameters set into the module.

run_cmd

Subroutine called to send commands and values to the module.

Set_man_op

Set a new manual operating percentage. for manual mode of operation.

Write_Cal_Values

Writes calibration values to the module.

Write_param_MSG

Writes parameter values to the module.

Unscheduled Programs

Motion Groups

Ungrouped Axes

Add-On Instructions

Data Types

User-Defined

Hardy_Cal_Params

Parameters used for weight and rate calibration points.

Hardy_Config

List of parameters in the configuration table

Hardy_Default_In
Hardy_Parameters
Hardy_RC_Command
Hardy_Simple_CMD
Hardy_test_tag

Strings

h_string_instrument
h_string_state
STRING

Add-On-Defined

Module-Defined

AB:1756_DI:C:0
AB:1756_DI:I:0
AB:1756_DO:C:0

- **AB:1756_DO:I:0**
- **AB:1756_DO:O:0**
- **AB:1756_MODULE:C:0**
- **AB:1756_MODULE_INT_64Bytes:I:0**
- **AB:1756_MODULE_INT_64Bytes:O:0**
- **AB:1756_MODULE_REAL_44Bytes:I:0**
- **AB:1756_MODULE_REAL_4Bytes:O:0**
- **AB:1756_NIO_Struct:C:0**
- **AB:1756_OF4_Float:C:0**
- **AB:1756_OF4_Float:I:0**
- **AB:1756_OF4_Float:O:0**
- **AB:CONTROLNET_MODULE:C:0**
- **AB:CONTROLNET_MODULE_INT_8Bytes:I:0**
- **AB:CONTROLNET_MODULE_INT_8Bytes:O:0**
- **AB:ETHERNET_MODULE:C:0**
- **AB:ETHERNET_MODULE_INT_250Bytes:I:0**
- **AB:ETHERNET_MODULE_INT_250Bytes:O:0**
- **AB:ETHERNET_MODULE_SINT_24Bytes:I:0**
- **AB:ETHERNET_MODULE_SINT_24Bytes:O:0**
- **AB:ETHERNET_MODULE_SINT_256Bytes:I:0**
- **AB:ETHERNET_MODULE_SINT_256Bytes:O:0**
- **HI:1756_1FC:C:0**
- **HI:1756_2FC:I:0**
- **HI:1756_2FC:O:0**
- **HI:1756_FC_Channel:I:0**
- **HI:1756_FC_Channel:O:0**

Trends

I/O Configuration

- **1756 Backplane, 1756-A7**
  - **[0] 1756-L61 RC1756_DM**
  - **[1] 1756-OF4 ANALOG_OUTPUT**
  - **[2] 1756-IB16 DIGITAL_INPUT**
  - **[5] HI1756-xFC/A Hardy_1756_FC**
    Hardy 1756 FC
  - **[6] 1756-ENBT/A enet**
    - **Ethernet**

Name	Value	Data Type	Scope
batch_total	533	DINT	MainProgram
both_wt_n_rate_values	0	BOOL	MainProgram
Cal_values_read		Hardy_Cal_Params	RC1756_DM
Cal_values_read.Command	1	DINT	
Cal_values_read.Channel	0	DINT	
Cal_values_read.Rate_Dec_Pt	2	DINT	
Cal_values_read.Operating_Percent_0	691	DINT	
Cal_values_read.Rate_0	1	DINT	
Cal_values_read.Operating_Percent_1	1500	DINT	
Cal_values_read.Rate_1	45	DINT	
Cal_values_read.Operating_Percent_2	2000	DINT	
Cal_values_read.Rate_2	74	DINT	
Cal_values_read.Operating_Percent_3	4000	DINT	
Cal_values_read.Rate_3	187	DINT	
Cal_values_read.Operating_Percent_4	6000	DINT	
Cal_values_read.Rate_4	300	DINT	
Cal_values_read.Operating_Percent_5	8000	DINT	
Cal_values_read.Rate_5	410	DINT	
Cal_values_read.Operating_Percent_6	10000	DINT	
Cal_values_read.Rate_6	522	DINT	
Cal_values_read.Cal_Zero_Counts	2392367	DINT	
Cal_values_read.Cal_Low_Counts	2392367	DINT	
Cal_values_read.Calibration_K	1146903830	DINT	
Cal_values_write		Hardy_Cal_Params	RC1756_DM
Cal_values_write.Command	129	DINT	
Cal_values_write.Channel	0	DINT	
Cal_values_write.Rate_Dec_Pt	2	DINT	
Cal_values_write.Operating_Percent_0	0	DINT	
Cal_values_write.Rate_0	1	DINT	
Cal_values_write.Operating_Percent_1	1500	DINT	
Cal_values_write.Rate_1	0	DINT	
Cal_values_write.Operating_Percent_2	2000	DINT	
Cal_values_write.Rate_2	10	DINT	
Cal_values_write.Operating_Percent_3	4000	DINT	
Cal_values_write.Rate_3	20	DINT	
Cal_values_write.Operating_Percent_4	6000	DINT	
Cal_values_write.Rate_4	40	DINT	
Cal_values_write.Operating_Percent_5	8000	DINT	
Cal_values_write.Rate_5	50	DINT	
Cal_values_write.Operating_Percent_6	10000	DINT	
Cal_values_write.Rate_6	80	DINT	
Cal_values_write.Cal_Zero_Counts	2437847	DINT	
Cal_values_write.Cal_Low_Counts	2437847	DINT	
Cal_values_write.Calibration_K	1146903830	DINT	
clear_total	0	BOOL	MainProgram
cmd	0	INT	MainProgram
cmd_sel	0	DINT	MainProgram
cmd1	103	INT	MainProgram

cmd2	103	INT	MainProgram
cmd4	0	INT	MainProgram
cmd5	0	INT	MainProgram
control_bits	13	DINT	MainProgram
control_bits.4	0	BOOL	
Start clear total routine			
copy_to_config_table	0	BOOL	MainProgram
current_setpt	309	DINT	MainProgram
delay_total		TIMER	MainProgram
delay_total.PRE	500	DINT	
delay_total.ACC	0	DINT	
delay_total.EN	0	BOOL	
delay_total.TT	0	BOOL	
delay_total.DN	0	BOOL	
DO_read_cal	0	BOOL	MainProgram
DO_read_cal_0	0	BOOL	MainProgram
DO_READ_PARAM	0	BOOL	MainProgram
DO_READ_PARAM_0	0	BOOL	MainProgram
do_read_totals	0	BOOL	MainProgram
do_write_cal	0	BOOL	MainProgram
do_write_cal_0	0	BOOL	MainProgram
DO_write_PARAM	0	BOOL	MainProgram
DO_write_PARAM_0	0	BOOL	MainProgram
first_scan	0	BOOL	MainProgram
format	16#0000_0222	DINT	MainProgram
Generic_CMD		Hardy_Simple_CMD	RC1756_DM
Generic_CMD.Command	0	DINT	
Generic_CMD.Channel	0	DINT	
Generic_CMD.Format_Status	16#0000_0222	DINT	
Local:1:O		AB:1756_OF4_Float:O:0	RC1756_DM
Local:1:O.Ch0Data	0.0	REAL	
Local:1:O.Ch1Data	0.0	REAL	
Local:1:O.Ch2Data	0.0	REAL	
Local:1:O.Ch3Data	0.0	REAL	
Local:2:I		AB:1756_DI:I:0	RC1756_DM
Local:2:I.Fault	2#0000_0000_0000_0000_0000_0000_0000_0000	DINT	
Local:2:I.Data	2#0000_0000_0000_0000_0000_0000_0000_0000	DINT	
Local:5:C		HI:1756_1FC:C:0	RC1756_DM
Local:5:C.Ch0Format	16#1222_0000	DINT	
Local:5:C.Ch0ChanActive	1	DINT	
Local:5:C.Ch0Metric	0	DINT	
Local:5:C.Ch0SpanWeight	5000	DINT	
Local:5:C.Ch0CalLowWeight	2200	DINT	
Local:5:C.Ch0ROCTimeBase	4	DINT	
Local:5:C.Ch0ROCTimeUnits	1	DINT	
Local:5:C.Ch0NumAverages	20	DINT	
Local:5:C.Ch0Waversaver	3	DINT	
Local:5:C.Ch0PID_P	500	DINT	
Local:5:C.Ch0PID_I	200	DINT	
Local:5:C.Ch0BatchAmount	1000	DINT	
Local:5:C.Ch0Preact	0	DINT	
Local:5:C.Ch0Mode	0	DINT	
Local:5:C.Ch0PrimeTime	5	DINT	
Local:5:C.Ch0PauseTime	10	DINT	
Local:5:C.Ch0FeedTime	30	DINT	
Local:5:C.Ch0InitialRefillOn	0	DINT	
Local:5:C.Ch0AutoRefillOn	1	DINT	
Local:5:C.Ch0RefillStartWeight	400	DINT	
Local:5:C.Ch0RefillEndWeight	1600	DINT	
Local:5:C.Ch0RefillTooHighWeight	2500	DINT	
Local:5:C.Ch0RefillShutdownWeight			

Local:5:C (Continued)			
	100	DINT	
Local:5:C.Ch0OpAdjust	0	DINT	
Local:5:C.Ch0OpAdjustPerCent	0	DINT	
Local:5:C.Ch0WaitTime	5	DINT	
Local:5:C.Ch0RECLevel	100	DINT	
Local:5:C.Ch0RECTime	30	DINT	
Local:5:C.Ch0RECShutdown	0	DINT	
Local:5:C.Ch0ShutoffLoPerCent	0	DINT	
Local:5:C.Ch0Total	0	DINT	
Local:5:C.Ch0BatchTotal	0	DINT	
Local:5:C.Ch0LowAlarmShutDownRate			
	100	DINT	
Local:5:C.Ch0HighAlarmShutDownRate			
	700	DINT	
Local:5:C.Ch0AlarmDelay	30	DINT	
Local:5:C.Ch0RateSetPoint	400	DINT	
Local:5:C.Ch0PTermLimit	10	DINT	
Local:5:C.Ch0spares37	0	DINT	
Local:5:C.Ch0spares38	0	DINT	
Local:5:C.Ch0spares39	0	DINT	
Local:5:C.Ch0spares40	0	DINT	
Local:5:C.Ch0spares41	0	DINT	
Local:5:C.Ch0spares42	0	DINT	
Local:5:C.Ch0spares43	0	DINT	
Local:5:C.Ch0spares44	0	DINT	
Local:5:C.Ch0spares45	0	DINT	
Local:5:C.Ch0spares46	0	DINT	
Local:5:C.Ch0spares47	0	DINT	
Local:5:C.Ch0spares48	0	DINT	
Local:5:C.Ch0spares49	0	DINT	
Local:5:I		HI:1756_2FC:I:0	RC1756_DM
Local:5:I.Ch0		HI:1756_FC_Channel:I:0	
Local:5:I.Ch0.Command	16#0000	INT	
Local:5:I.Ch0.CmdStatus	0	INT	
Local:5:I.Ch0.ParamVal	0	DINT	
Local:5:I.Ch0.ParamNumber	0	INT	
Local:5:I.Ch0.OP	0	INT	
Local:5:I.Ch0.ROC	0	DINT	
Local:5:I.Ch0.GROSS	0	DINT	
Local:5:I.Ch0.Setpoint	0	DINT	
Local:5:I.Ch0.ControllerState	0	INT	
Local:5:I.Ch0.Version_Minor	0	SINT	
Local:5:I.Ch0.Version_Major	0	SINT	
Local:5:I.Ch0.ControllerStatus	2#0000_0000_0000_0000	INT	
Local:5:I.Ch0.ErrorAdConvert	0	BOOL	
Local:5:I.Ch0.ErrorAdFailure	0	BOOL	
Local:5:I.Ch0.StatusOn	0	BOOL	
Local:5:I.Ch0.ErrorLowAlarm	0	BOOL	
Local:5:I.Ch0.ErrorHighAlarm	0	BOOL	
Local:5:I.Ch0.ErroRControlLost	0	BOOL	
Local:5:I.Ch0.ErrorShutdown	0	BOOL	
Local:5:I.Ch0.ErrorRange	0	BOOL	
Local:5:I.Ch0.ErrorRec	0	BOOL	
Local:5:I.Ch0.ErrorRecMinus	0	BOOL	
Local:5:I.Ch0.ErrorRefillOver	0	BOOL	
Local:5:I.Ch0.StatusRefill	0	BOOL	
Local:5:I.Ch0.StatusBatchComplete			
	0	BOOL	
Local:5:I.Ch0.ErrorEEpromWrite	0	BOOL	
Local:5:I.Ch0.StatusChanEnabled	0	BOOL	
Local:5:I.Ch0.Counter	0	INT	
Local:5:I.Ch1		HI:1756_FC_Channel:I:0	
Local:5:I.Ch1.Command	16#0000	INT	

Local:5:I (Continued)			
Local:5:I.Ch1.CmdStatus	0	INT	
Local:5:I.Ch1.ParamVal	0	DINT	
Local:5:I.Ch1.ParamNumber	0	INT	
Local:5:I.Ch1.OP	0	INT	
Local:5:I.Ch1.ROC	0	DINT	
Local:5:I.Ch1.GROSS	0	DINT	
Local:5:I.Ch1.Setpoint	0	DINT	
Local:5:I.Ch1.ControllerState	0	INT	
Local:5:I.Ch1.Version_Minor	0	SINT	
Local:5:I.Ch1.Version_Major	0	SINT	
Local:5:I.Ch1.ControllerStatus	2#0000_0000_0000_0000	INT	
Local:5:I.Ch1.ErrorAdConvert	0	BOOL	
Local:5:I.Ch1.ErrorAdFailure	0	BOOL	
Local:5:I.Ch1.StatusOn	0	BOOL	
Local:5:I.Ch1.ErrorLowAlarm	0	BOOL	
Local:5:I.Ch1.ErrorHighAlarm	0	BOOL	
Local:5:I.Ch1.ErroRControlLost	0	BOOL	
Local:5:I.Ch1.ErrorShutdown	0	BOOL	
Local:5:I.Ch1.ErrorRange	0	BOOL	
Local:5:I.Ch1.ErrorRec	0	BOOL	
Local:5:I.Ch1.ErrorRecMinus	0	BOOL	
Local:5:I.Ch1.ErrorRefillOver	0	BOOL	
Local:5:I.Ch1.StatusRefill	0	BOOL	
Local:5:I.Ch1.StatusBatchComplete	0	BOOL	
Local:5:I.Ch1.ErrorEEpromWrite	0	BOOL	
Local:5:I.Ch1.StatusChanEnabled	0	BOOL	
Local:5:I.Ch1.Counter	0	INT	
Local:5:O		HI:1756_2FC:O:0	RC1756_DM
Local:5:O.Ch0		HI:1756_FC_Channel:O:0	
Local:5:O.Ch0.Command	16#0000	INT	
Local:5:O.Ch0.Format	16#0000	INT	
Local:5:O.Ch0.ParamVal	0	DINT	
Local:5:O.Ch0.ParamNumber	0	INT	
Local:5:O.Ch0.reserved06	0	INT	
Local:5:O.Ch0.reserved07	0	INT	
Local:5:O.Ch0.reserved08	0	INT	
Local:5:O.Ch0.reserved09	0	INT	
Local:5:O.Ch0.reserved10	0	INT	
Local:5:O.Ch0.reserved11	0	INT	
Local:5:O.Ch0.reserved12	0	INT	
Local:5:O.Ch0.reserved13	0	INT	
Local:5:O.Ch0.reserved14	0	INT	
Local:5:O.Ch0.reserved15	0	INT	
Local:5:O.Ch0.reserved16	0	INT	
Local:5:O.Ch1		HI:1756_FC_Channel:O:0	
Local:5:O.Ch1.Command	16#0000	INT	
Local:5:O.Ch1.Format	16#0000	INT	
Local:5:O.Ch1.ParamVal	0	DINT	
Local:5:O.Ch1.ParamNumber	0	INT	
Local:5:O.Ch1.reserved06	0	INT	
Local:5:O.Ch1.reserved07	0	INT	
Local:5:O.Ch1.reserved08	0	INT	
Local:5:O.Ch1.reserved09	0	INT	
Local:5:O.Ch1.reserved10	0	INT	
Local:5:O.Ch1.reserved11	0	INT	
Local:5:O.Ch1.reserved12	0	INT	
Local:5:O.Ch1.reserved13	0	INT	
Local:5:O.Ch1.reserved14	0	INT	
Local:5:O.Ch1.reserved15	0	INT	
Local:5:O.Ch1.reserved16	0	INT	
man_op_delay		TIMER	MainProgram
man_op_delay.PRE	1000	DINT	

man_op_delay (Continued)			
man_op_delay.ACC	0	DINT	
man_op_delay.EN	0	BOOL	
man_op_delay.TT	0	BOOL	
man_op_delay.DN	0	BOOL	
mask_RD	16#0000_000f	DINT	MainProgram
MSG_read_cal_values		MESSAGE	RC1756_DM
MSG_read_cal_values.Flags	16#0020	INT	
MSG_read_cal_values.EW	0	BOOL	
MSG_read_cal_values.ER	0	BOOL	
MSG_read_cal_values.DN	1	BOOL	
MSG_read_cal_values.ST	0	BOOL	
MSG_read_cal_values.EN	0	BOOL	
MSG_read_cal_values.TO	0	BOOL	
MSG_read_cal_values.EN_CC	0	BOOL	
MSG_read_cal_values.ERR	16#0000	INT	
MSG_read_cal_values.EXERR	16#0000_0000	DINT	
MSG_read_cal_values.ERR_SRC	0	SINT	
MSG_read_cal_values.DN_LEN	80	INT	
MSG_read_cal_values.REQ_LEN	12	INT	
MSG_read_cal_values.DestinationLink	0	INT	
MSG_read_cal_values.DestinationNode	8#000_000	INT	
MSG_read_cal_values.SourceLink	0	INT	
MSG_read_cal_values.Class	16#0004	INT	
MSG_read_cal_values.Attribute	16#0000	INT	
MSG_read_cal_values.Instance	254	DINT	
MSG_read_cal_values.LocalIndex	0	DINT	
MSG_read_cal_values.Channel	'$00'	SINT	
MSG_read_cal_values.Rack	8#000	SINT	
MSG_read_cal_values.Group	0	SINT	
MSG_read_cal_values.Slot	0	SINT	
MSG_read_cal_values.Path	'$01$05'	STRING	
MSG_read_cal_values.Path.LEN	2	DINT	
MSG_read_cal_values.Path.DATA		SINT	
MSG_read_cal_values.RemoteIndex	0	DINT	
MSG_read_cal_values.RemoteElement	"	STRING	
MSG_read_cal_values.RemoteElement.LEN	0	DINT	
MSG_read_cal_values.RemoteElement.DATA		SINT	
MSG_read_cal_values.UnconnectedTimeout	30000000	DINT	
MSG_read_cal_values.ConnectionRate	7500000	DINT	
MSG_read_cal_values.TimeoutMultiplier	0	SINT	
MSG_READ_PARAM		MESSAGE	RC1756_DM
MSG_READ_PARAM.Flags	16#0020	INT	
MSG_READ_PARAM.EW	0	BOOL	
MSG_READ_PARAM.ER	0	BOOL	
MSG_READ_PARAM.DN	1	BOOL	
MSG_READ_PARAM.ST	0	BOOL	
MSG_READ_PARAM.EN	0	BOOL	
MSG_READ_PARAM.TO	0	BOOL	
MSG_READ_PARAM.EN_CC	0	BOOL	
MSG_READ_PARAM.ERR	16#0000	INT	
MSG_READ_PARAM.EXERR	16#0000_0000	DINT	
MSG_READ_PARAM.ERR_SRC	0	SINT	
MSG_READ_PARAM.DN_LEN	208	INT	
MSG_READ_PARAM.REQ_LEN	12	INT	

MSG_READ_PARAM (Continued)			
MSG_READ_PARAM.DestinationLink			
	0	INT	
MSG_READ_PARAM.DestinationNode			
	8#000_000	INT	
MSG_READ_PARAM.SourceLink	0	INT	
MSG_READ_PARAM.Class	16#0004	INT	
MSG_READ_PARAM.Attribute	16#0000	INT	
MSG_READ_PARAM.Instance	254	DINT	
MSG_READ_PARAM.LocalIndex	0	DINT	
MSG_READ_PARAM.Channel	'$00'	SINT	
MSG_READ_PARAM.Rack	8#000	SINT	
MSG_READ_PARAM.Group	0	SINT	
MSG_READ_PARAM.Slot	0	SINT	
MSG_READ_PARAM.Path	'$01$05'	STRING	
MSG_READ_PARAM.Path.LEN	2	DINT	
MSG_READ_PARAM.Path.DATA			
		SINT	
MSG_READ_PARAM.RemoteIndex			
	0	DINT	
MSG_READ_PARAM.RemoteElement			
	''	STRING	
MSG_READ_PARAM.RemoteElement.LEN			
	0	DINT	
MSG_READ_PARAM.RemoteElement.DATA			
		SINT	
MSG_READ_PARAM.UnconnectedTimeout			
	30000000	DINT	
MSG_READ_PARAM.ConnectionRate			
	7500000	DINT	
MSG_READ_PARAM.TimeoutMultiplier			
	0	SINT	
MSG_write_cal_values		MESSAGE	RC1756_DM
MSG_write_cal_values.Flags	16#0000	INT	
MSG_write_cal_values.EW	0	BOOL	
MSG_write_cal_values.ER	0	BOOL	
MSG_write_cal_values.DN	0	BOOL	
MSG_write_cal_values.ST	0	BOOL	
MSG_write_cal_values.EN	0	BOOL	
MSG_write_cal_values.TO	0	BOOL	
MSG_write_cal_values.EN_CC	0	BOOL	
MSG_write_cal_values.ERR	16#0000	INT	
MSG_write_cal_values.EXERR	16#0000_0000	DINT	
MSG_write_cal_values.ERR_SRC	0	SINT	
MSG_write_cal_values.DN_LEN	80	INT	
MSG_write_cal_values.REQ_LEN	80	INT	
MSG_write_cal_values.DestinationLink			
	0	INT	
MSG_write_cal_values.DestinationNode			
	8#000_000	INT	
MSG_write_cal_values.SourceLink	0	INT	
MSG_write_cal_values.Class	16#0004	INT	
MSG_write_cal_values.Attribute	16#0000	INT	
MSG_write_cal_values.Instance	254	DINT	
MSG_write_cal_values.LocalIndex	0	DINT	
MSG_write_cal_values.Channel	'$00'	SINT	
MSG_write_cal_values.Rack	8#000	SINT	
MSG_write_cal_values.Group	0	SINT	
MSG_write_cal_values.Slot	0	SINT	
MSG_write_cal_values.Path	'$01$05'	STRING	
MSG_write_cal_values.Path.LEN	2	DINT	
MSG_write_cal_values.Path.DATA			
		SINT	
MSG_write_cal_values.RemoteIndex			

MSG_write_cal_values (Continued)			
	0	DINT	
MSG_write_cal_values.RemoteElement			
	''	STRING	
MSG_write_cal_values.RemoteElement.LEN			
	0	DINT	
MSG_write_cal_values.RemoteElement.DATA			
		SINT	
MSG_write_cal_values.UnconnectedTimeout			
	30000000	DINT	
MSG_write_cal_values.ConnectionRate			
	7500000	DINT	
MSG_write_cal_values.TimeoutMultiplier			
	0	SINT	
MSG_write_PARAM		MESSAGE	RC1756_DM
MSG_write_PARAM.Flags	16#0200	INT	
MSG_write_PARAM.EW	0	BOOL	
MSG_write_PARAM.ER	0	BOOL	
MSG_write_PARAM.DN	0	BOOL	
MSG_write_PARAM.ST	0	BOOL	
MSG_write_PARAM.EN	0	BOOL	
MSG_write_PARAM.TO	0	BOOL	
MSG_write_PARAM.EN_CC	1	BOOL	
MSG_write_PARAM.ERR	16#0000	INT	
MSG_write_PARAM.EXERR	16#0000_0000	DINT	
MSG_write_PARAM.ERR_SRC	0	SINT	
MSG_write_PARAM.DN_LEN	208	INT	
MSG_write_PARAM.REQ_LEN	208	INT	
MSG_write_PARAM.DestinationLink			
	0	INT	
MSG_write_PARAM.DestinationNode			
	8#000_000	INT	
MSG_write_PARAM.SourceLink	0	INT	
MSG_write_PARAM.Class	16#0004	INT	
MSG_write_PARAM.Attribute	16#0000	INT	
MSG_write_PARAM.Instance	254	DINT	
MSG_write_PARAM.LocalIndex	0	DINT	
MSG_write_PARAM.Channel	'$00'	SINT	
MSG_write_PARAM.Rack	8#000	SINT	
MSG_write_PARAM.Group	0	SINT	
MSG_write_PARAM.Slot	0	SINT	
MSG_write_PARAM.Path	'$01$05'	STRING	
MSG_write_PARAM.Path.LEN	2	DINT	
MSG_write_PARAM.Path.DATA		SINT	
MSG_write_PARAM.RemoteIndex			
	0	DINT	
MSG_write_PARAM.RemoteElement			
	''	STRING	
MSG_write_PARAM.RemoteElement.LEN			
	0	DINT	
MSG_write_PARAM.RemoteElement.DATA			
		SINT	
MSG_write_PARAM.UnconnectedTimeout			
	30000000	DINT	
MSG_write_PARAM.ConnectionRate			
	7500000	DINT	
MSG_write_PARAM.TimeoutMultiplier			
	0	SINT	
new_man_OP	8000	DINT	MainProgram
new_setpt	309	DINT	MainProgram
once_0	0	BOOL	MainProgram
once_1	0	BOOL	MainProgram
once_2	0	BOOL	MainProgram
once_3	0	BOOL	MainProgram

once_4	0	BOOL	MainProgram
once_5	0	BOOL	MainProgram
once_6	0	BOOL	MainProgram
once_7	0	BOOL	MainProgram
once_8	0	BOOL	MainProgram
only_rate_values	0	BOOL	MainProgram
only_weight_values	0	BOOL	MainProgram
param_read		Hardy_Parameters	RC1756_DM
param_read.Command	15	DINT	
param_read.Channel	0	DINT	
param_read.Format_Cmd_status	546	DINT	
param_read.Ch_Active	1	DINT	
param_read.Metric	0	DINT	
param_read.SpanWeight	400	DINT	
param_read.CalLowWeight	0	DINT	
param_read.ROCTimeBase	4	DINT	
param_read.ROCTimeUnits	1	DINT	
param_read.Averages	20	DINT	
param_read.WAVERSAVE	3	DINT	
param_read.PID_P	471	DINT	
param_read.PID_I	192	DINT	
param_read.BatchAmount	0	DINT	
param_read.Preact	10	DINT	
param_read.mode	0	DINT	
param_read.PrineTime	5	DINT	
param_read.PauseTime	7	DINT	
param_read.FeedTime	30	DINT	
param_read.InitialRefillOn	0	DINT	
param_read.AutoRefillOn	1	DINT	
param_read.RefillStartWeight	200	DINT	
param_read.RefillEndWeight	1200	DINT	
param_read.RefillTooHighWeight	2000	DINT	
param_read.RefillShutdownWeight	100	DINT	
param_read.OpAdjust	0	DINT	
param_read.OpAdjustPercent	0	DINT	
param_read.WaitTime	5	DINT	
param_read.RECLevel	10	DINT	
param_read.RECTime	25	DINT	
param_read.REC_Shutdown	1	DINT	
param_read.ShutoffLoPercent	0	DINT	
param_read.Total	533	DINT	
param_read.BatchTotal	533	DINT	
param_read.LowAlarmShutDownRate	37	DINT	
param_read.HighAlarmShutDownRate	413	DINT	
param_read.AlarmDelay	30	DINT	
param_read.RateSetpoint	350	DINT	
param_read.REC_P_Limit	10	DINT	
param_read.Spare0	-2147483648	DINT	
param_read.Spare1	-2147483648	DINT	
param_read.Spare2	-2147483648	DINT	
param_read.Spare3	-2147483648	DINT	
param_read.Spare4	-2147483648	DINT	
param_read.Spare5	-2147483648	DINT	
param_read.Spare6	-2147483648	DINT	
param_read.Spare7	-2147483648	DINT	
param_read.Spare8	-2147483648	DINT	
param_read.Spare9	-2147483648	DINT	
param_read.Spare10	-2147483648	DINT	
param_read.Spare11	-2147483648	DINT	
param_read.Spare12	-2147483648	DINT	
param_write		Hardy_Parameters	RC1756_DM

param_write (Continued)			
param_write.Command	143	DINT	
param_write.Channel	0	DINT	
param_write.Format_Cmd_status	546	DINT	
param_write.Ch_Active	1	DINT	
param_write.Metric	0	DINT	
param_write.SpanWeight	15000	DINT	
param_write.CalLowWeight	15000	DINT	
param_write.ROCTimeBase	4	DINT	
param_write.ROCTimeUnits	1	DINT	
param_write.Averages	20	DINT	
param_write.WAVERSAVE	3	DINT	
param_write.PID_P	471	DINT	
param_write.PID_I	192	DINT	
param_write.BatchAmount	1400	DINT	
param_write.Preact	12	DINT	
param_write.mode	0	DINT	
param_write.PrineTime	5	DINT	
param_write.PauseTime	7	DINT	
param_write.FeedTime	30	DINT	
param_write.InitialRefillOn	0	DINT	
param_write.AutoRefillOn	1	DINT	
param_write.RefillStartWeight	500	DINT	
param_write.RefillEndWeight	1700	DINT	
param_write.RefillTooHighWeight	2000	DINT	
param_write.RefillShutdownWeight	100	DINT	
param_write.OpAdjust	0	DINT	
param_write.OpAdjustPercent	0	DINT	
param_write.WaitTime	5	DINT	
param_write.RECLevel	10	DINT	
param_write.RECTime	30	DINT	
param_write.REC_Shutdown	0	DINT	
param_write.ShutoffLoPercent	20	DINT	
param_write.Total	0	DINT	
param_write.BatchTotal	0	DINT	
param_write.LowAlarmShutDownRate	0	DINT	
param_write.HighAlarmShutDownRate	700	DINT	
param_write.AlarmDelay	30	DINT	
param_write.RateSetpoint	400	DINT	
param_write.REC_P_Limit	10	DINT	
param_write.Spare0	0	DINT	
param_write.Spare1	0	DINT	
param_write.Spare2	0	DINT	
param_write.Spare3	0	DINT	
param_write.Spare4	0	DINT	
param_write.Spare5	0	DINT	
param_write.Spare6	0	DINT	
param_write.Spare7	0	DINT	
param_write.Spare8	0	DINT	
param_write.Spare9	0	DINT	
param_write.Spare10	0	DINT	
param_write.Spare11	0	DINT	
param_write.Spare12	0	DINT	
readconfig		Hardy_Config	MainProgram
readconfig.Format_Cmd_status	16#0222_0000	DINT	
readconfig.Ch_Active	1	DINT	
readconfig.Metric	0	DINT	
readconfig.SpanWeight	400	DINT	
readconfig.CalLowWeight	0	DINT	
readconfig.ROCTimeBase	4	DINT	
readconfig.ROCTimeUnits	1	DINT	

readconfig (Continued)			
readconfig.Averages	20	DINT	
readconfig.WAVERSAVE	3	DINT	
readconfig.PID_P	471	DINT	
readconfig.PID_I	192	DINT	
readconfig.BatchAmount	0	DINT	
readconfig.Preact	10	DINT	
readconfig.mode	0	DINT	
readconfig.PrineTime	5	DINT	
readconfig.PauseTime	7	DINT	
readconfig.FeedTime	30	DINT	
readconfig.InitialRefillOn	0	DINT	
readconfig.AutoRefillOn	1	DINT	
readconfig.RefillStartWeight	200	DINT	
readconfig.RefillEndWeight	1200	DINT	
readconfig.RefillTooHighWeight	2000	DINT	
readconfig.RefillShutdownWeight	100	DINT	
readconfig.OpAdjust	0	DINT	
readconfig.OpAdjustPercent	0	DINT	
readconfig.WaitTime	5	DINT	
readconfig.RECLevel	10	DINT	
readconfig.RECTime	25	DINT	
readconfig.REC_Shutdown	1	DINT	
readconfig.ShutoffLoPercent	0	DINT	
readconfig.Total	533	DINT	
readconfig.BatchTotal	533	DINT	
readconfig.LowAlarmShutDownRate	37	DINT	
readconfig.HighAlarmShutDownRate	413	DINT	
readconfig.AlarmDelay	30	DINT	
readconfig.RateSetpoint	200	DINT	
readconfig.REC_P_Limit	10	DINT	
readconfig.Spare0	0	DINT	
readconfig.Spare1	0	DINT	
readconfig.Spare2	0	DINT	
readconfig.Spare3	0	DINT	
readconfig.Spare4	0	DINT	
readconfig.Spare5	0	DINT	
readconfig.Spare6	0	DINT	
readconfig.Spare7	0	DINT	
readconfig.Spare8	0	DINT	
readconfig.Spare9	0	DINT	
readconfig.Spare10	0	DINT	
readconfig.Spare11	0	DINT	
readconfig.Spare12	0	DINT	
return_status		Hardy_RC_Command	MainProgram
return_status.Command_No	103	INT	
return_status.Format	0	INT	
return_status.Data_0	8000	INT	
return_status.Data_1	0	INT	
return_status.Param_ID	55	INT	
set_man_op	0	BOOL	MainProgram
setpt_delay		TIMER	MainProgram
setpt_delay.PRE	1000	DINT	
setpt_delay.ACC	19	DINT	
setpt_delay.EN	1	BOOL	
setpt_delay.TT	1	BOOL	
setpt_delay.DN	0	BOOL	
Setup_read_cal	0	BOOL	MainProgram
Setup_read_params	0	BOOL	MainProgram
Setup_write_cal_values	0	BOOL	MainProgram
Setup_write_params	0	BOOL	MainProgram
total	533	DINT	MainProgram

Properties - MESSAGE tag: MSG_read_cal_values

Configuration			
Message Type:	CIP Generic		
Service Type:	Custom		
Service Code:	4c (Hex)	Class:	4 (Hex)
Instance:	254	Attribute:	0 (Hex)
Source Element:	Generic_CMD		
Source Length:	12 (Bytes)		
Destination Element:	Cal_values_read		

Communication			
Path:	Hardy_1756_FC		
Communication Method:	N/A		
Channel:	N/A	Destination Link:	N/A
Source Link:	N/A	Destination Node:	N/A
Connected:	No	Cache Connections:	N/A

Status			
Enable:	No	Enable Waiting:	No
Start:	No	Done:	Yes
Done Length:	80	Error Code:	<none>
Timed Out:	No		
Extended Error Code:	<none>		

Properties - MESSAGE tag: MSG_READ_PARAM

Configuration			
Message Type:	CIP Generic		
Service Type:	Custom		
Service Code:	4c (Hex)	Class:	4 (Hex)
Instance:	254	Attribute:	0 (Hex)
Source Element:	Generic_CMD		
Source Length:	12 (Bytes)		
Destination Element:	param_read		

Communication			
Path:	Hardy_1756_FC		
Communication Method:	N/A		
Channel:	N/A	Destination Link:	N/A
Source Link:	N/A	Destination Node:	N/A
Connected:	No	Cache Connections:	N/A

Status			
Enable:	No	Enable Waiting:	No
Start:	No	Done:	Yes
Done Length:	208	Error Code:	<none>
Timed Out:	No		
Extended Error Code:	<none>		

Properties - MESSAGE tag: MSG_write_cal_values

Configuration			
Message Type:	CIP Generic		
Service Type:	Custom		
Service Code:	4c (Hex)	Class:	4 (Hex)
Instance:	254	Attribute:	0 (Hex)
Source Element:	Cal_values_write		
Source Length:	80 (Bytes)		
Destination Element:	Cal_values_read		

Communication			
Path:	Hardy_1756_FC		
Communication Method:	N/A		
Channel:	N/A	Destination Link:	N/A
Source Link:	N/A	Destination Node:	N/A
Connected:	No	Cache Connections:	N/A

Status			
Enable:	No	Enable Waiting:	No
Start:	No	Done:	No
Done Length:	80	Error Code:	<none>
Timed Out:	No		
Extended Error Code:	<none>		

Properties - MESSAGE tag: MSG_write_PARAM

Configuration			
Message Type:	CIP Generic		
Service Type:	Custom		
Service Code:	4c (Hex)	Class:	4 (Hex)
Instance:	254	Attribute:	0 (Hex)
Source Element:	param_write		
Source Length:	208 (Bytes)		
Destination Element:	param_read		

Communication			
Path:	Hardy_1756_FC		
Communication Method:	N/A		
Channel:	N/A	Destination Link:	N/A
Source Link:	N/A	Destination Node:	N/A
Connected:	No	Cache Connections:	N/A

Status			
Enable:	No	Enable Waiting:	No
Start:	No	Done:	No
Done Length:	208	Error Code:	<none>
Timed Out:	No		
Extended Error Code:	<none>		

Routine to clear Total

When the subroutine is triggered, this rung will move the write command, 103, to a com4 tag. It also moves the format value, xyz hex, Total parameter ID, 30, and the new total value, 0, into the Local:x:O table. Once triggered, the rung is blocked to prevent running again.

0

Start clear total routine control_bits.4 [/]

MOV
Move
Source 103
Dest cmd4
0

MOV
Move
Source format
16#0000_0222
Dest Local:5:O.Ch0.Format
16#0000

MOV
Move
Source 0
Dest Local:5:O.Ch0.ParamVal
0

MOV
Move
Source 30
Dest Local:5:O.Ch0.ParamNumber
0

Start clear total routine control_bits.4 (L)

The ladder logic seems to run very fast, so once the routine is triggered and we start moving data around, I placed a delay here to prevent commands being sent before all the data movement is done. I set for 1 second, but do not think it needs to be this long a delay. Just needs to be long enough for all data to be moved/copied before proceding.

1

Start clear total routine control_bits.4 [ ] delay_total.DN [/]

TON
Timer On Delay
Timer delay_total
Preset 500
Accum 0
(EN)
(DN)

Once the delay time has elapsed, will latch a bit on to start next stage of command.

2

delay_total.DN [ ] Start clear total routine control_bits.4 [ ] control_bits.5 (L)

Routine to clear Total

This rung will trigger the subroutine that actually runs the command and sends it to the module. This subroutine needs a command number as an input parameter. The command number in cmd4 tag will be given as the input parameter.

3

control_bits.5

Subroutine called to send commands and values to the module.

JSR
Jump To Subroutine
Routine Name run_cmd
Input Par cmd4

The subroutine will turn on a bit indicating when it is done. Once that bit, cmd_sel.15, is set, this rung will then clear tags, reset delay timers, copy status and clear bits that triggered the routine.

4

cmd_sel.15

MOV
Move
Source 0
Dest cmd4
0

COP
Copy File
Source return_status.Data_0
Dest total
Length 1

delay_total
RES

MOV
Move
Source 0
Dest control_bits
13

MOV
Move
Source 0
Dest cmd_sel
0

clear_total
U

(End)

This routine will allow the user to trigger the commands to be sent to the module. Each of the first rungs, 0 – 12, will trigger a different command. Each rung will move a command number into tag cmd to run the command.

This rung will trigger the Start command.

0 cmd_sel.0 — MOV: Move Source 1, Dest cmd 0

This rung will trigger the Stop command.

1 cmd_sel.1 — MOV: Move Source 2, Dest cmd 0

This rung will trigger the Refill command.

2 cmd_sel.2 — MOV: Move Source 3, Dest cmd 0

This rung will trigger the Write Non-Volatile Command.

3 cmd_sel.3 — MOV: Move Source 4, Dest cmd 0

This rung will trigger the Manual Command.

4 cmd_sel.4 — MOV: Move Source 5, Dest cmd 0

This routine will allow the user to trigger the commands to be sent to the module. Each of the first rungs, 0 – 12, will trigger a different command. Each rung will move a command number into tag cmd to run the command.

This rung will trigger the Abort Command.

5 cmd_sel.5 — MOV: Move Source 6, Dest cmd 0

This rung will trigger the Reload Non-Volatile Command.

6 cmd_sel.6 — MOV: Move Source 16, Dest cmd 0

This rung will trigger the Rate Cal 5 Pt Command.

7 cmd_sel.7 — MOV: Move Source 96, Dest cmd 0

This rung will trigger the Rate Cal 2 Pt Command.

8 cmd_sel.8 — MOV: Move Source 97, Dest cmd 0

This rung will trigger the Cal Low Command.

9 cmd_sel.9 — MOV: Move Source 100, Dest cmd 0

This rung will trigger the Cal High Command.

10 cmd_sel.10 — MOV: Move Source 101, Dest cmd 0

This routine will allow the user to trigger the commands to be sent to the module. Each of the first rungs, 0 – 12, will trigger a different command. Each rung will move a command number into tag cmd to run the command.

This rung will trigger the C2 Cal Command.

11 cmd_sel.11

MOV
Move
Source 102
Dest cmd
0

This rung will trigger the Set Default Parameters Command.

12 cmd_sel.12

MOV
Move
Source 148
Dest cmd
0

This rung will check to see if a command has been triggered. If so, it will call the subroutine to actually send the command to the module. The tag cmd will be sent to the subroutine as an input parameter indicating which command to run.

13

NEQ
Not Equal
Source A cmd
0
Source B 0

Subroutine called to send commands and values to the module.

JSR
Jump To Subroutine
Routine Name run_cmd
Input Par cmd

This routine will allow the user to trigger the commands to be sent to the module. Each of the first rungs, 0 – 12, will trigger a different command. Each rung will move a command number into tag cmd to run the command.

Once the subroutine is done, it will set bit cmd_sel.15 to on indicating it is done. At this point, this routing will clear the cmd tag, and reset all control bits.

14

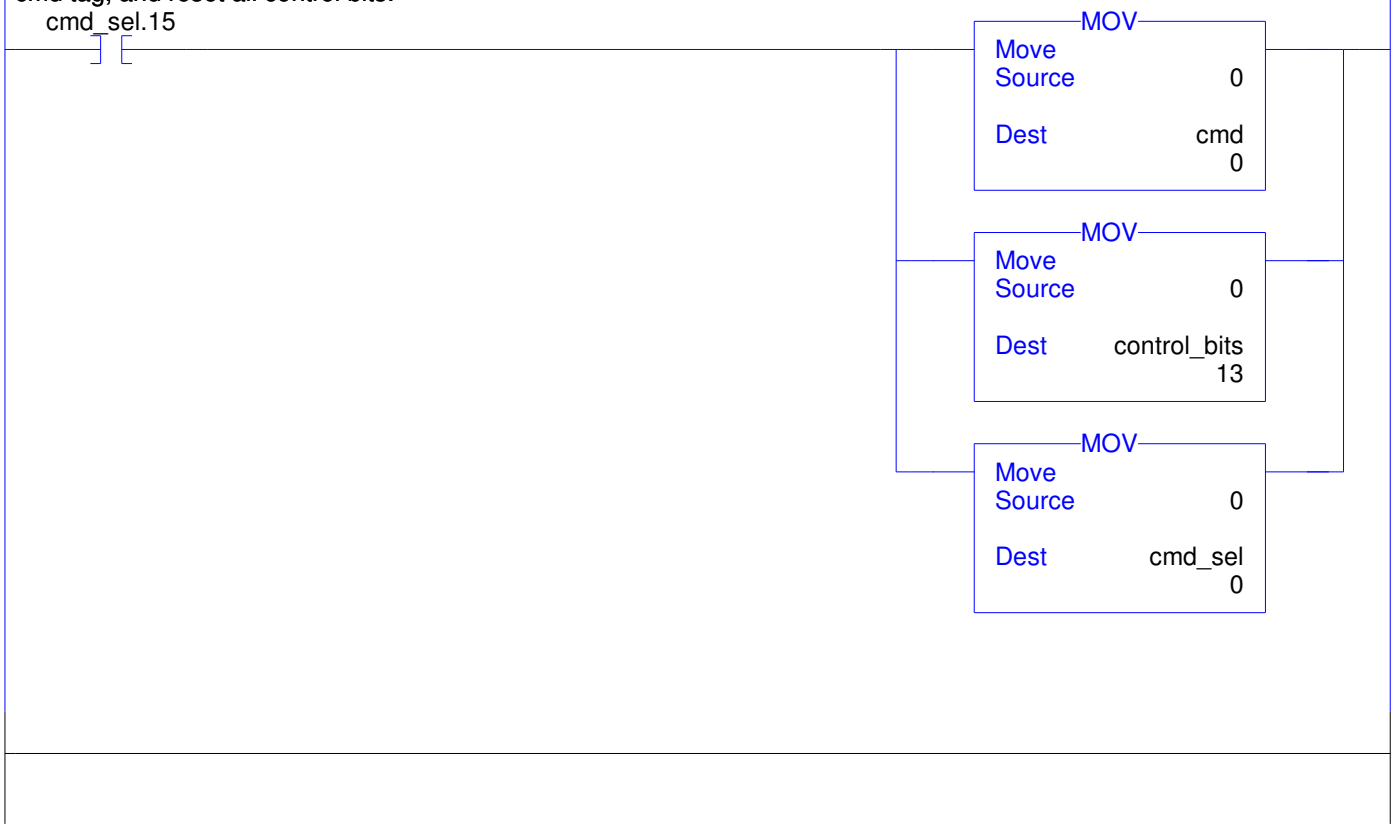

(End)

This rung will send the output percentage value from the HI 1756-FC module to the Analog Output module to control the feeder.

0

MOV
Move
Source Local:5:I.Ch0.OP
0
Dest Local:1:O.Ch0Data
0.0

These following rungs will take an input from the Digital input module and trigger a command from that input. These commands are: Input 0 is start; Input 1 is stop; Input 2 is refill; Input 3 will go to manual mode.

1

Local:2:I.Data.0 — NEQ (Not Equal, Source A Local:5:I.Ch0.ControllerState 0, Source B 4) — once_5 ONS — cmd_sel.0 L

2

Local:2:I.Data.1 — once_6 ONS — cmd_sel.1 L

3

Local:2:I.Data.2 — once_7 ONS — cmd_sel.2 L

4

Local:2:I.Data.3 — once_8 ONS — cmd_sel.4 L

(End)

Vendor/ Address/ Phone

Hardy Instruments
3860 Calle Fortunada, San Diego, CA , 92123-1825
(800) 821-5831 USA
Sample is for demonstration purposes only, showing an example of reading and writing commands and values to and from the module.

Main routine with bits tro trigger the start of all other routines.

I am using some ONS bits in subroutines. During start up, these bits are set to prevent outputs going on during startup phase of PLC. Because these are in subroutines, then do not get cleared, which causes problem when trying to run the sub routines. This rung will clear these bits the first time for proper operation of the subroutine commands.

0 first_scan / → once_0 (U), once_1 (U), once_2 (U), once_3 (U), once_4 (U), once_5 (U), once_6 (U), once_7 (U), once_8 (U)

1 → first_scan (L)

On power up, will copy current_setpt value to new_setpt tag. This sets up the compare for the times when the operator enters a new setpoint. Latch will prevent it from running multiple times during run time.

2 once_4 / →

COP
Copy File
Source current_setpt
Dest new_setpt
Length 1

EQU
Equal
Source A current_setpt 309
Source B new_setpt 309

→ once_4 (L)

Vendor/ Address/ Phone

Hardy Instruments
3860 Calle Fortunada, San Diego, CA , 92123-1825
(800) 821-5831 USA
Sample is for demonstration purposes only, showing an example of reading and writing commands and values to and from the module.

Main routine with bits tro trigger the start of all other routines.

The operator will enter a new setpoint into the new_setpt tag. If the new setpoint is not equal to the current setpoint, and the module is not in manual mode, then it will jump to the new_setpt subroutine. This subroutine will download the new setpoint value into the module.

3

NEQ
Not Equal
Source A Local:5:I.Ch0.ControllerState
0
Source B 2

NEQ
Not Equal
Source A new_setpt
309
Source B current_setpt
309

Sets a new rate setpoint

JSR
Jump To Subroutine
Routine Name new_setpt

This rung will jump to the subroutine that checks for a command being triggered.

This routine will allow the user to trigger the commands to be sent to the module. Each of the first rungs, 0 – 12, will trigger a different command. Each rung will move a command number into tag cmd to run the command.

4

JSR
Jump To Subroutine
Routine Name cmd_select

The Local:x:C table is in SINT registers, so different values are difficult to read. This rung will copy the data located in the Local:x:C table into a tag the user can read.

List of parameters in the configuration table

5

COP
Copy File
Source Local:5:C.Ch0Format
Dest readconfig
Length 1

Vendor/ Address/ Phone

Hardy Instruments
3860 Calle Fortunada, San Diego, CA , 92123-1825
(800) 821-5831 USA
Sample is for demonstration purposes only, showing an example of reading and writing commands and values to and from the module.

Main routine with bits tro trigger the start of all other routines.

This sample code does not use the AOP for the module, so writing the data values into the Local:x:C table can be a little difficult. This rung will copy the data from the tag a parameters read command fills and places it into the Local:x:C table.

6 copy_to_config_table

COP
Copy File
Source param_read.Ch_Active
Dest Local:5:C.Ch0ChanActive
Length 144

This rung will trigger the read command to read the parameters from the module. This will also be triggered if the user wishes to read the totals.

7 DO_READ_PARAM_0 | do_read_totals

Reads the parameters set into the module.

JSR
Jump To Subroutine
Routine Name read_param_msg

This rung will read the calibration values from the module

8 DO_read_cal_0

Reads the calibration values from the module.

JSR
Jump To Subroutine
Routine Name Read_Cal_Values

This will start the write of the parameter values.

9 DO_write_PARAM_0

Writes parameter values to the module.

JSR
Jump To Subroutine
Routine Name Write_param_MSG

Vendor/ Address/ Phone

Hardy Instruments
3860 Calle Fortunada, San Diego, CA , 92123-1825
(800) 821-5831 USA
Sample is for demonstration purposes only, showing an example of reading and writing commands and values to and from the module.

Main routine with bits tro trigger the start of all other routines.

This will write the calibration parameters. There are two different portions of the modules calibration, the weight calibration and the rate calibration. This rung allows you to select which portion or both portions to write.

10

only_rate_values
only_weight_values
both_wt_n_rate_values

Writes calibration values to the module.
JSR
Jump To Subroutine
Routine Name Write_Cal_Values

This will start the operation to set the manual operating percentage when in manual mode.

11

EQU
Equal
Source A Local:5:I.Ch0.ControllerState
0
Source B 2

set_man_op

Set a new manual operating percentage. for manual mode of operation.
JSR
Jump To Subroutine
Routine Name Set_man_op

This will clear the total from the memory.

12

clear_total

Routine to clear Total
JSR
Jump To Subroutine
Routine Name Clear_Total

This jumps to the subroutine that controls the inputs and outputs from the module.

13

JSR
Jump To Subroutine
Routine Name control_IO

(End)

Sets a new rate setpoint

When the subroutine is triggered, this rung will move the write command, 103, to a com2 tag. It also moves the format value, xyz hex, setpoint parameter ID, 35, and the new setpoint value into the Local:x:O table. Once triggered, the rung is blocked to prevent running again.

0

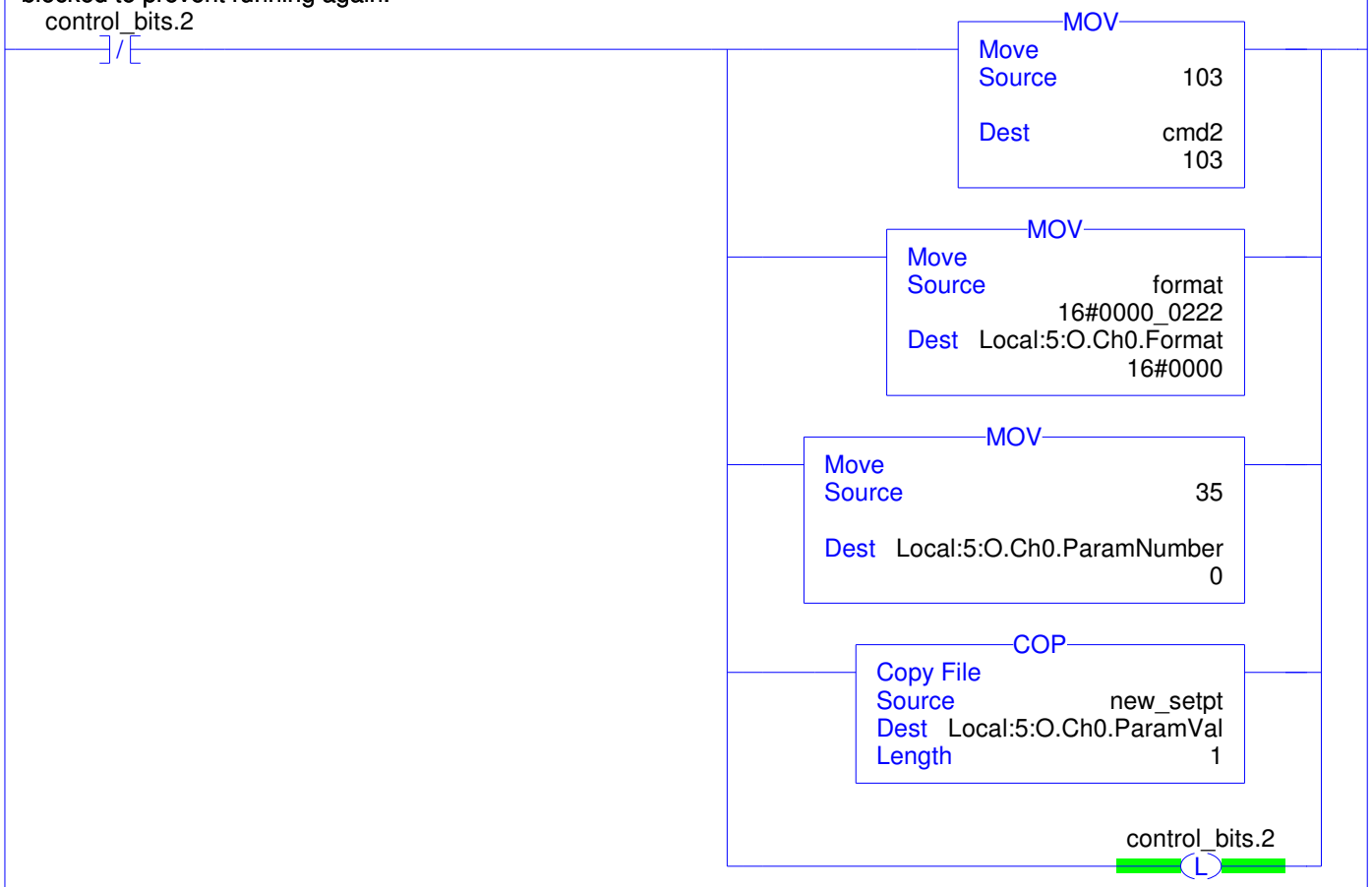

The ladder logic seems to run very fast, so once the routine is triggered and we start moving data around, I placed a delay here to prevent commands being sent before all the data movement is done. I set for 1 second, but do not think it needs to be this long a delay. Just needs to be long enough for all data to be moved/copied before proceding.

1

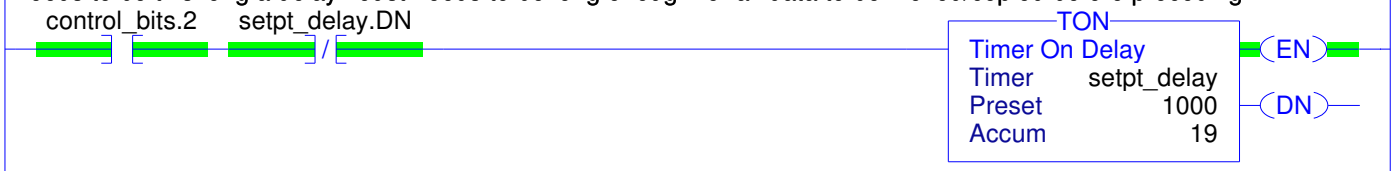

Once the delay time has elapsed, will latch a bit on to start next stage of command.

2

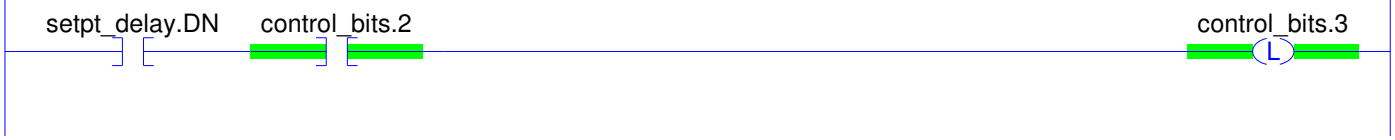

Sets a new rate setpoint

This rung will trigger the subroutine that actually runs the command and sends it to the module. This subroutine needs a command number as a input parameter. The command number in cmd2 tag will be given as the input parameter.

3

control_bits.3

Subroutine called to send commands and values to the module.

JSR
Jump To Subroutine
Routine Name run_cmd
Input Par cmd2

The subroutine will turn on a bit indicating when it is done. Once that bit, cmd_sel.15, is set, this rung will then clear tags, reset delay timers, copy status and clear bits that triggered the routine.

4

cmd_sel.15

MOV
Move
Source 0
Dest cmd2
103

Parameter Id

EQU
Equal
Source A return_status.Param_ID
55
Source B 35

COP
Copy File
Source return_status.Data_0
Dest current_setpt
Length 1

setpt_delay
RES

MOV
Move
Source 0
Dest control_bits
13

MOV
Move
Source 0
Dest cmd_sel
0

(End)

Reads the calibration values from the module.

When routine started, this rung will, using the mask move, move the number of decimal places applicable for the rate cal numbers, into the Generic_CMD tag. Also moved into this tag is the channel number and the command number. This tag will be used for several commands, the command number indicating the actual command that is being run.

0

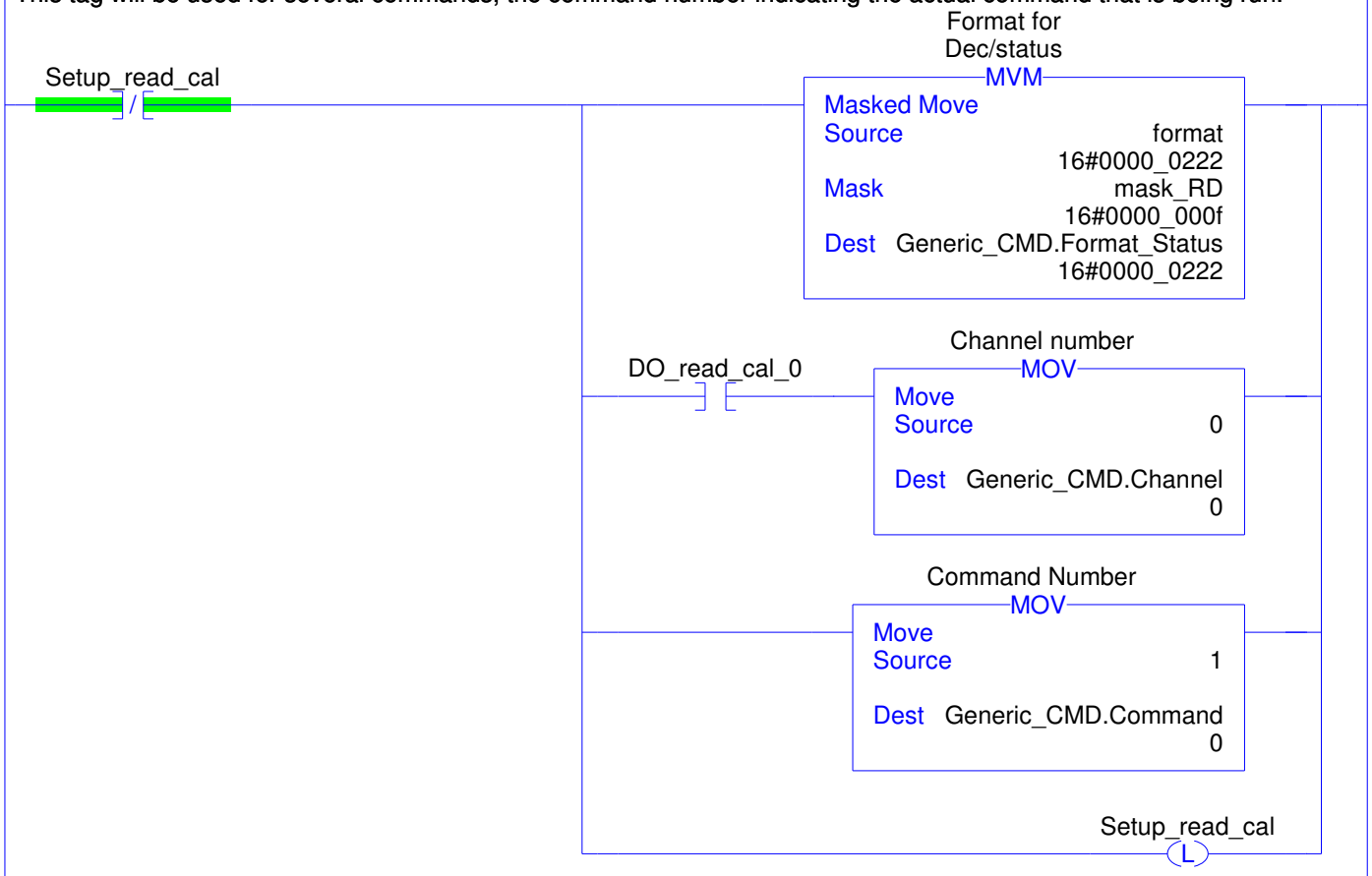

Once the command has been entered into the Generic_CMD tag, the MSG instruction will be started. It will use the Generic_CMD tag as the source tag for this instruction. The destination tag for this instruction will be a user defined tag holding the calibration values named Cal_values_read.

1

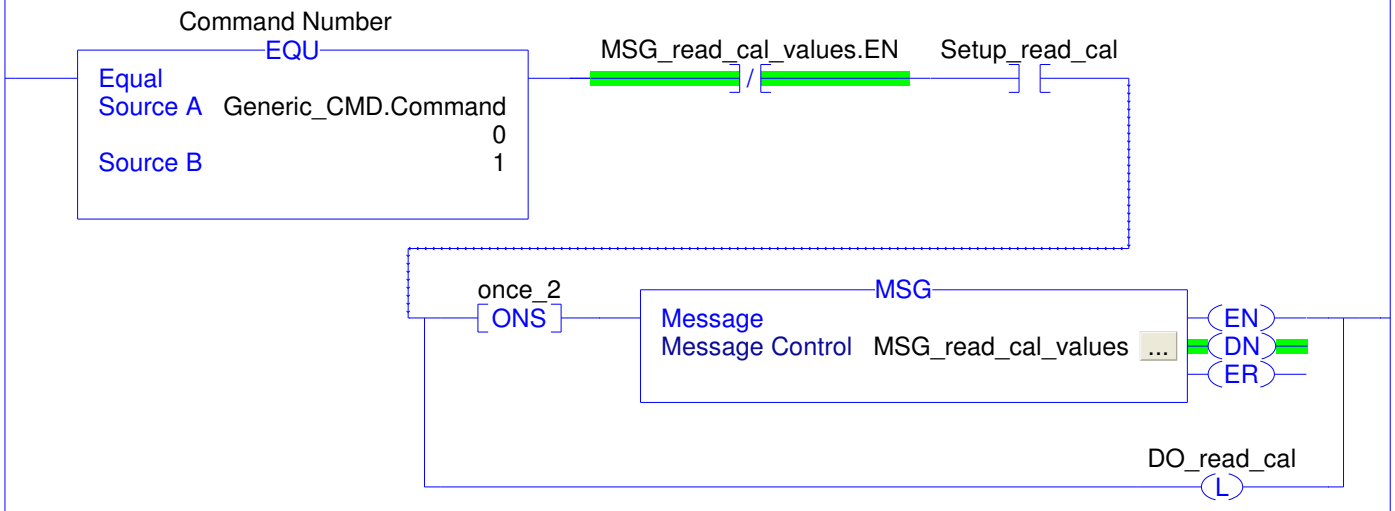

Reads the calibration values from the module.

When the MSG instruction is complete, the setup bits and tags are cleared.

2

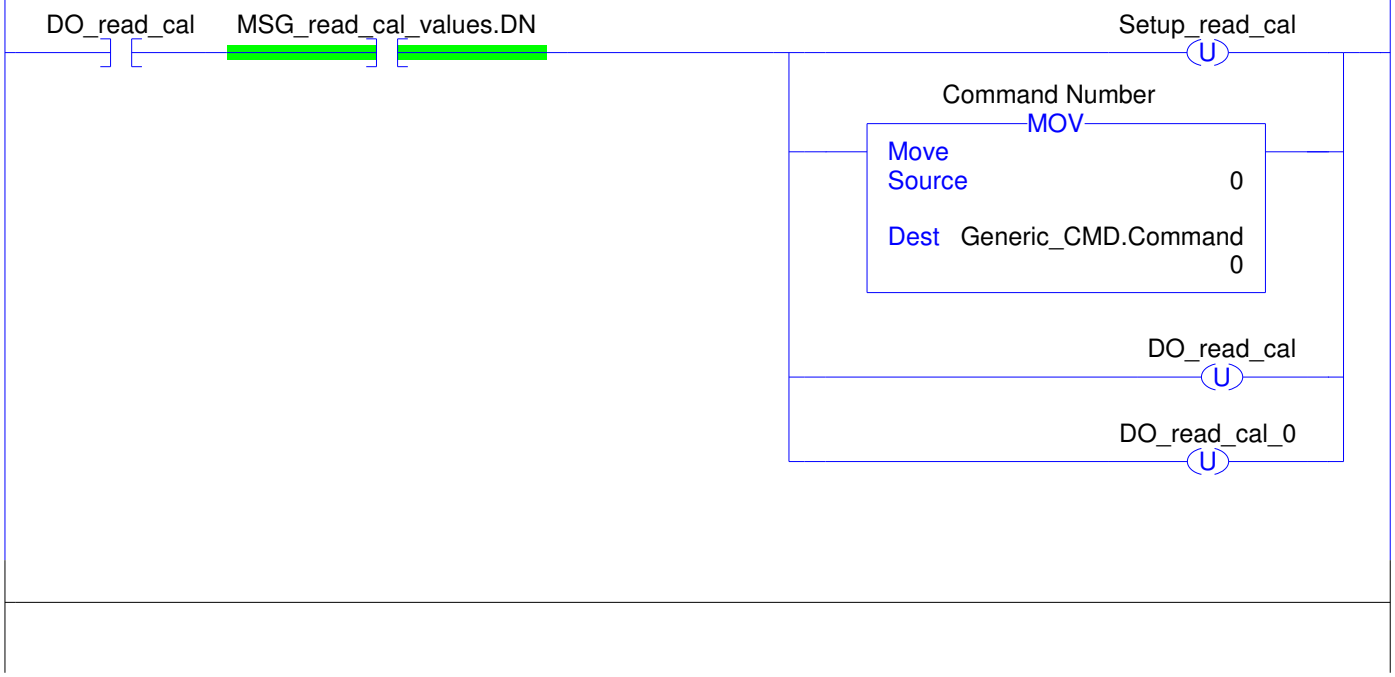

(End)

Reads the parameters set into the module.

When routine started, this rung will move the format value, which holds the decimal place data applicable for the Rate, Weight and Total type data into the Generic_CMD tag. Also moved into this tag is the channel number and the command number.
This tag will be used for several commands, the command number indicating the actual command that is being run.

0

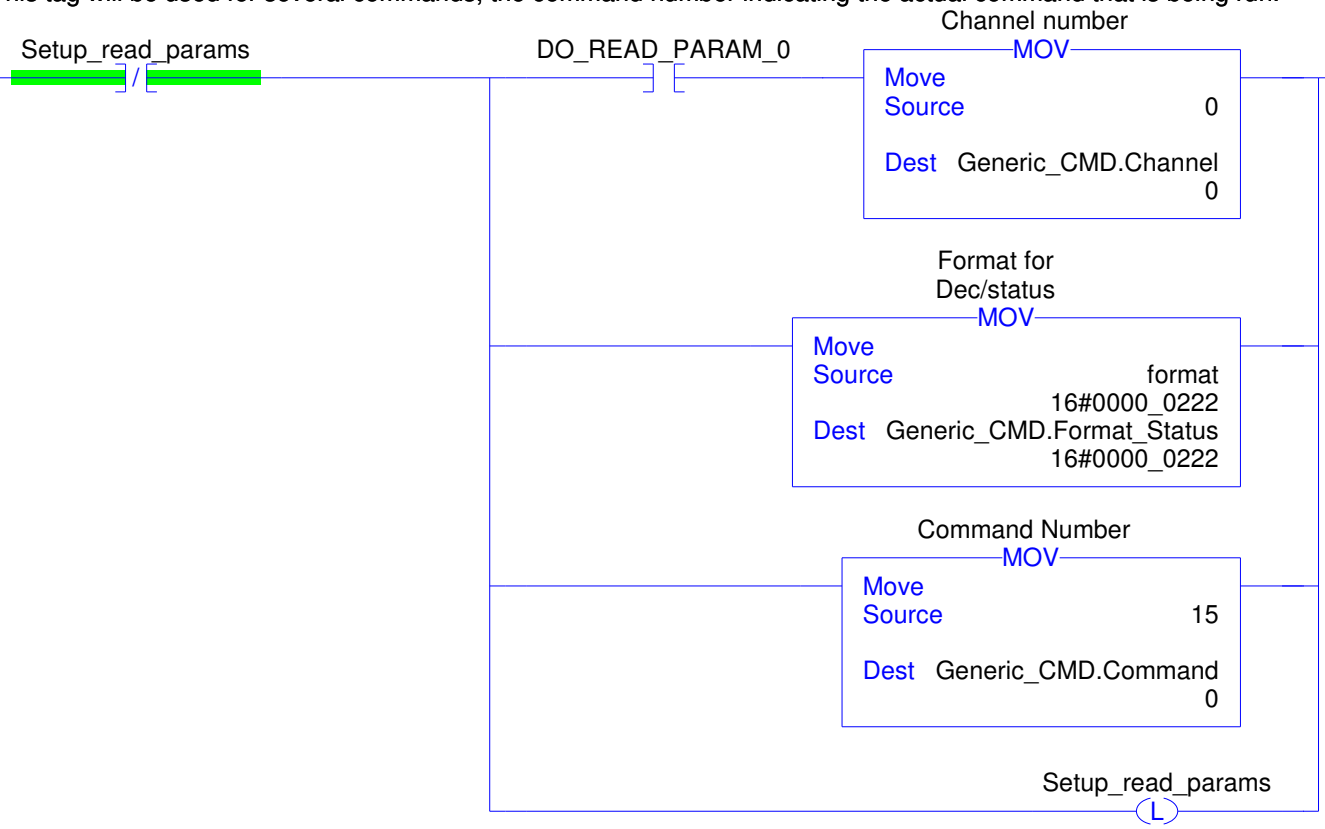

Once the command has been entered into the Generic_CMD tag, the MSG instruction will be started. It will use the Generic_CMD tag as the source tag for this instruction. The destination tag for this instruction will be a user defined tag holding the calibration values named param_read.

1

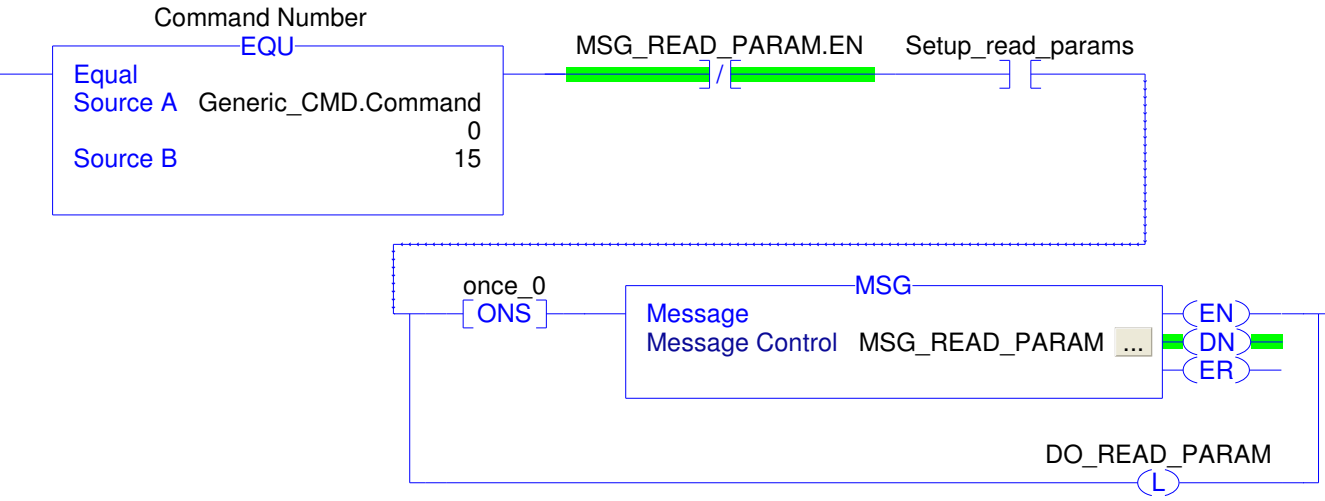

Reads the parameters set into the module.

When the MSG instruction is complete, the setup bits and tags are cleared.

2

DO_READ_PARAM MSG_READ_PARAM.DN Setup_read_params (U)

COP
Copy File
Source param_read.Total
Dest total
Length 1

COP
Copy File
Source param_read.BatchTotal
Dest batch_total
Length 1

do_read_totals (U)

DO_READ_PARAM (U)

DO_READ_PARAM_0 (U)

(End)

Subroutine called to send commands and values to the module.

This routine will get command numbers from other routines and actually send it to the module, gather return status, and let calling routines know when it is done.
This rung will move the input command number to the Local:x:O data table to trigger the command.

0

SBR
Subroutine
Input Par cmd1

control_bits.0]/[

MOV
Move
Source cmd1
103
Dest Local:5:O.Ch0.Command
16#0000

control_bits.0 (L)

Once it has written the command number out to the module in the output table, it will monitor the input table Local:x:I for a reflection of the command number sent. This would indicate the command is completed. Once completed, the rung will copy the command status information into the “return_status” tag. This is a location where the user can refer to for status and/or error codes.

1

control_bits.0] [

EQU
Equal
Source A Local:5:I.Ch0.Command
16#0000
Source B cmd1
103

COP
Copy File
Source Local:5:I.Ch0.Command
Dest return_status
Length 1

control_bits.1 (L)

Once the command is complete, this rung will clear the output data location and set the bit indicating to the calling routine that it is done.

2

control_bits.1] [

MOV
Move
Source 0
Dest Local:5:O.Ch0.Command
16#0000

cmd_sel.15 (L)

(End)

Set a new manual operating percentage. for manual mode of operation.

When the subroutine is triggered, this rung will move the write command, 103, to a com5 tag. It also moves the format value, xyz hex, manual OP parameter ID, 55, and the new OP value into the Local:x:O table. Once triggered, the rung is blocked to prevent running again.

0

control_bits.6 /

MOV
Move
Source 103
Dest cmd5
0

MOV
Move
Source format
16#0000_0222
Dest Local:5:O.Ch0.Format
16#0000

MOV
Move
Source 55
Dest Local:5:O.Ch0.ParamNumber
0

MOV
Move
Source new_man_OP
8000
Dest Local:5:O.Ch0.ParamVal
0

control_bits.6 (L)

The ladder logic seems to run very fast, so once the routine is triggered and we start moving data around, I placed a delay here to prevent commands being sent before all the data movement is done. I set for 1 second, but do not think it needs to be this long a delay. Just needs to be long enough for all data to be moved/copied before proceding.

1

control_bits.6 man_op_delay.DN /

TON
Timer On Delay
Timer man_op_delay
Preset 1000
Accum 0
EN
DN

Once the delay time has elapsed, will latch a bit on to start next stage of command.

2

man_op_delay.DN control_bits.6 control_bits.7 (L)

Set a new manual operating percentage. for manual mode of operation.

This rung will trigger the subroutine that actually runs the command and sends it to the module. This subroutine needs a command number as a input parameter. The command number in cmd5 tag will be given as the input parameter.

3

control_bits.7

Subroutine called to send commands and values to the module.

JSR
Jump To Subroutine
Routine Name run_cmd
Input Par cmd5

The subroutine will turn on a bit indicating when it is done. Once that bit, cmd_sel.15, is set, this rung will then clear tags, reset delay timers, copy status and clear bits that triggered the routine.

4

cmd_sel.15

MOV
Move
Source 0
Dest cmd5
0

man_op_delay
RES

MOV
Move
Source 0
Dest control_bits
13

MOV
Move
Source 0
Dest cmd_sel
0

set_man_op
U

(End)

Writes calibration values to the module.

When routine started, this rung will, using the mask move, move the number of decimal places applicable for the rate cal numbers, into the Cal_values_write tag. Also moved into this tag are the channel number and the command number. The command number being written will depend on the selection of what portion of the calibration data the user wishes to write.

0

Setup_write_cal_values

Parameters used for weight and rate calibration points. Channel Number

MOV
Move
Source 0
Dest Cal_values_write.Channel
0

Parameters used for weight and rate calibration points. Rate Decimal Places

MVM
Masked Move
Source format
16#0000_0222
Mask mask_RD
16#0000_000f
Dest Cal_values_write.Rate_Dec_Pt
2

only_rate_values

Parameters used for weight and rate calibration points. Command Number

MOV
Move
Source 129
Dest Cal_values_write.Command
129

only_weight_values

Parameters used for weight and rate calibration points. Command Number

MOV
Move
Source 130
Dest Cal_values_write.Command
129

both_wt_n_rate_values

Parameters used for weight and rate calibration points. Command Number

MOV
Move
Source 131
Dest Cal_values_write.Command
129

Setup_write_cal_values
L

Writes calibration values to the module.

Once the command has been entered into the Cal_values_write tag, the MSG instruction will be started. It will use the Cal_values_write tag as the source tag for this instruction. The destination tag for this instruction will be a user defined tag holding the calibration values being read back, named Cal_values_read.

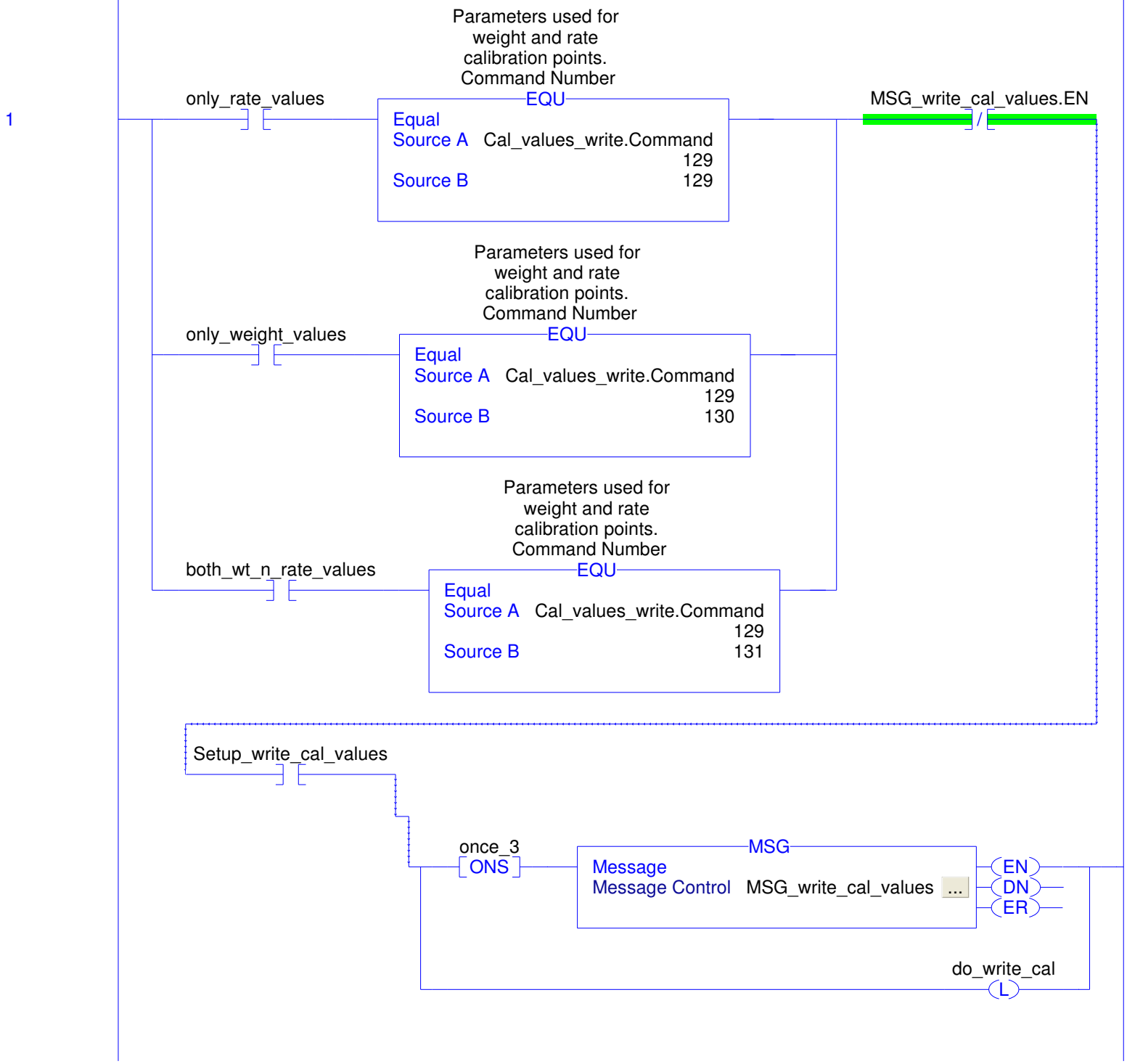

Writes calibration values to the module.

When the MSG instruction is complete, the setup bits and tags are cleared.

2

do_write_cal MSG_write_cal_values.DN Setup_write_cal_values (U)

Parameters used for weight and rate calibration points. Command Number

MOV
Move
Source 0
Dest Cal_values_write.Command
129

do_write_cal_0 (U)

do_write_cal (U)

only_rate_values (U)

only_weight_values (U)

both_wt_n_rate_values (U)

(End)

Writes parameter values to the module.

When routine started, this rung will move the format value with the number of decimal places applicable for the rate, weight, and total numbers, into the param_write tag. Also moved into this tag are the channel number and the command number.

0

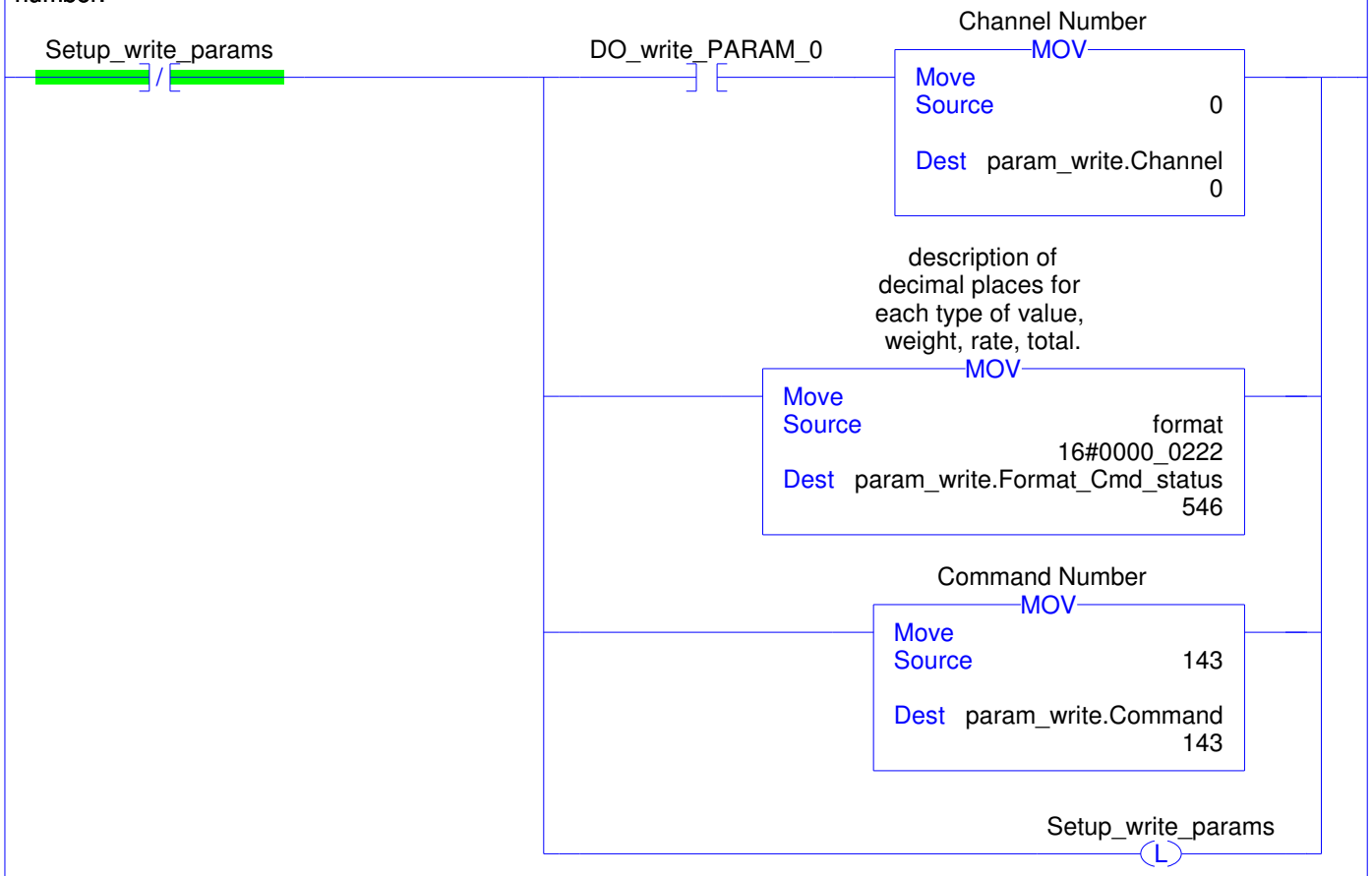

Once the command has been entered into the param_write tag, the MSG instruction will be started. It will use the param_write tag as the source tag for this instruction. The destination tag for this instruction will be a user defined tag holding the parameter values being read back, named param_read.

1

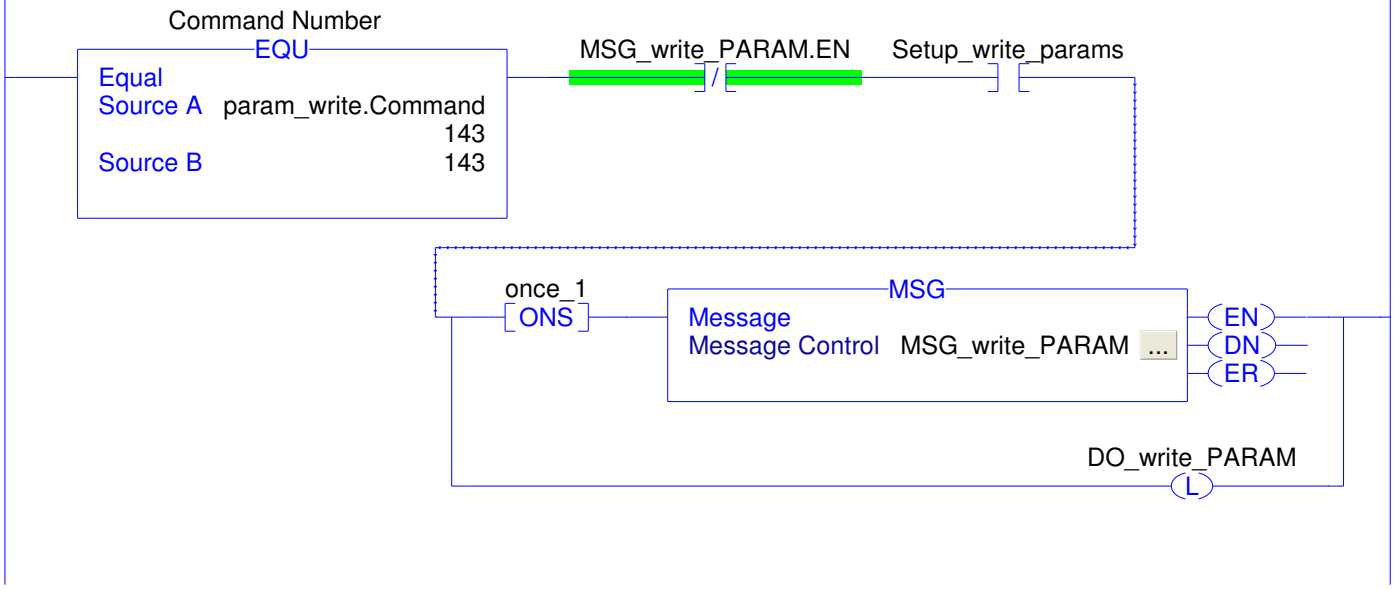

Writes parameter values to the module.

When the MSG instruction is complete, the setup bits and tags are cleared.

2

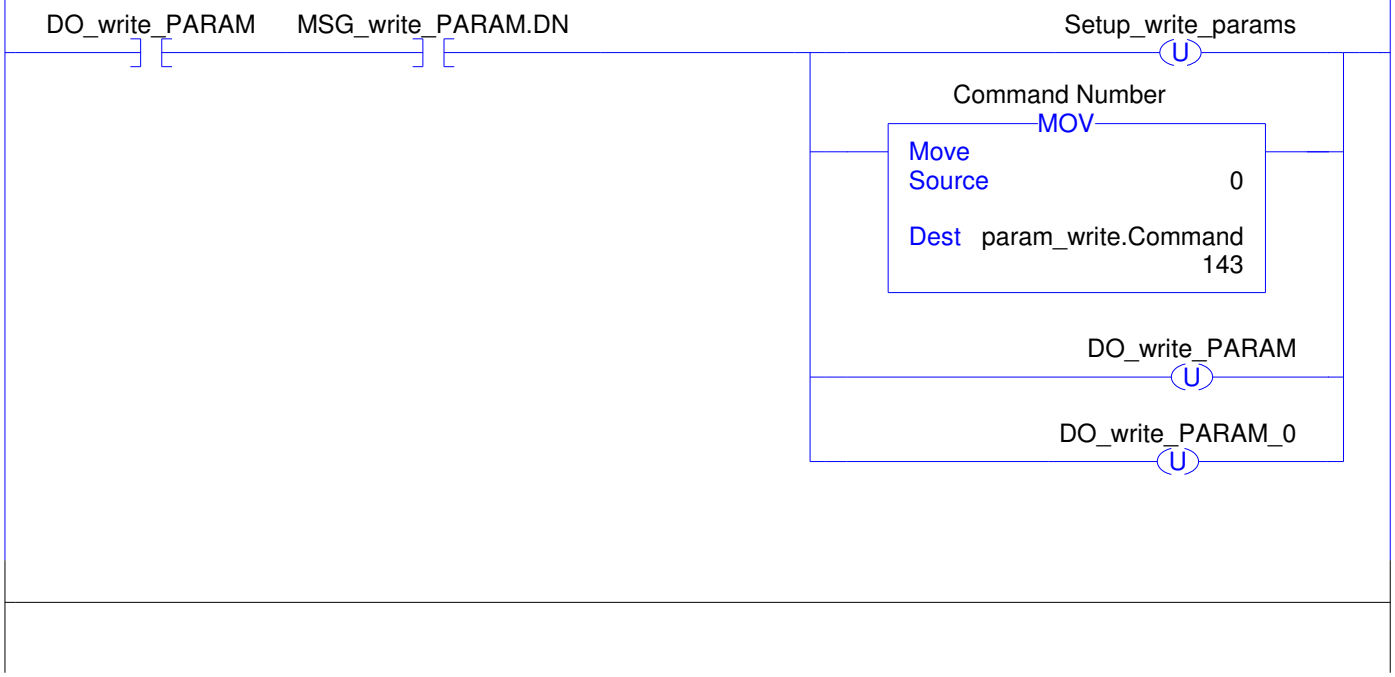

(End)

Data type Name: Hardy_Cal_Params

Description:
Parameters used for weight and rate calibration points.

Size: 80 byte(s)

Name	Data Type	Style	Description
Command	DINT	Decimal	Command Number
Channel	DINT	Decimal	Channel Number
Rate_Dec_Pt	DINT	Decimal	Rate Decimal Places
Operating_Percent_0	DINT	Decimal	Low Operating Percentage
Rate_0	DINT	Decimal	Low percentage rate
Operating_Percent_1	DINT	Decimal	FIRST Operating Percentage for Cal
Rate_1	DINT	Decimal	First percentage rate
Operating_Percent_2	DINT	Decimal	Second Operating Percentage for Cal
Rate_2	DINT	Decimal	Second percentage rate
Operating_Percent_3	DINT	Decimal	Third Operating Percentage for Cal
Rate_3	DINT	Decimal	Third percentage rate
Operating_Percent_4	DINT	Decimal	Forth Operating Percentage for Cal
Rate_4	DINT	Decimal	Forth percentage rate
Operating_Percent_5	DINT	Decimal	Fifth Operating Percentage for Cal
Rate_5	DINT	Decimal	Fifth percentage rate
Operating_Percent_6	DINT	Decimal	High Operating Percentage for Cal
Rate_6	DINT	Decimal	High percentage rate
Cal_Zero_Counts	DINT	Decimal	ADC counts at zero
Cal_Low_Counts	DINT	Decimal	ADC counts ad cal low point
Calibration_K	DINT	Decimal	Calibration constant

Data type Name: Hardy_Config

Description:
List of parameters in the configuration table

Size: 200 byte(s)

Name	Data Type	Style	Description
Format_Cmd_status	DINT	Hex	description of decimal places for each type of value, weight, rate, total.
Ch_Active	DINT	Decimal	Channel turned on
Metric	DINT	Decimal	Units of measure to report in Lb/oz/ton/Kg/g/metric ton
SpanWeight	DINT	Decimal	Calibration High Weight
CalLowWeight	DINT	Decimal	Calibration Low weight
ROCTimeBase	DINT	Decimal	Time base to calculate ROC
ROCTimeUnits	DINT	Decimal	Units to report ROC sec/min/hr
Averages	DINT	Decimal	Number of averages
WAVERSAVE	DINT	Decimal	WAVERSAVER setting for vibration
PID_P	DINT	Decimal	P value
PID_I	DINT	Decimal	I value
BatchAmount	DINT	Decimal	Batch amount if in batch mode.
Preact	DINT	Decimal	Preact amount for inflight material
mode	DINT	Decimal	Continuous/Batch
PrineTime	DINT	Decimal	Time for priming feeder at start of auto rate cal.
PauseTime	DINT	Decimal	Time between feed rate runs during auto rate cal.
FeedTime	DINT	Decimal	Feed time for auto rate calibrations
InitialRefillOn	DINT	Decimal	Initial refill ON/OFF
AutoRefillOn	DINT	Decimal	Auto refill ON/OFF
RefillStartWeight	DINT	Decimal	Start refill weight
RefillEndWeight	DINT	Decimal	Stop refill weight
RefillTooHighWeight	DINT	Decimal	High weight limit
RefillShutdownWeight	DINT	Decimal	Low weight limit
OpAdjust	DINT	Decimal	Refill adjust ON/OFF/LEARN
OpAdjustPercent	DINT	Decimal	correction to OP during refill
WaitTime	DINT	Decimal	Settle time
RECLevel	DINT	Decimal	REC level Percent of feed rate.
RECTime	DINT	Decimal	Time in REC before shutoff
REC_Shutdown	DINT	Decimal	Shutdown for REC alarm Y/N
ShutoffLoPercent	DINT	Decimal	Output percentage for shut off condition.
Total	DINT	Decimal	Total of all product since last cleared.
BatchTotal	DINT	Decimal	Total for last operation
LowAlarmShutDownRate	DINT	Decimal	Low rate limit
HighAlarmShutDownRate	DINT	Decimal	High rate limit

Name	Data Type	Style	Description
AlarmDelay	DINT	Decimal	Delay time for alarms
RateSetpoint	DINT	Decimal	Rate to run at
REC_P_Limit	DINT	Decimal	Limit for making adjustments on the output percentage
Spare0	DINT	Decimal	spare
Spare1	DINT	Decimal	spare
Spare2	DINT	Decimal	spare
Spare3	DINT	Decimal	spare
Spare4	DINT	Decimal	spare
Spare5	DINT	Decimal	spare
Spare6	DINT	Decimal	spare
Spare7	DINT	Decimal	spare
Spare8	DINT	Decimal	spare
Spare9	DINT	Decimal	spare
Spare10	DINT	Decimal	spare
Spare11	DINT	Decimal	spare
Spare12	DINT	Decimal	spare

Data type Name: Hardy_Default_In

Description:

Size: 24 byte(s)

Name	Data Type	Style	Description
Operating_Percentage	INT	Decimal	
Rate_Of_Change	DINT	Decimal	
Gross_Weight	DINT	Decimal	
Rate_Setpoint	DINT	Decimal	
State	INT	Hex	
Firmware_Version	INT	Hex	
Status	INT	Hex	
Counter	INT	Decimal	

Data type Name: Hardy_Parameters

Description:

Size: 208 byte(s)

Name	Data Type	Style	Description
Command	DINT	Decimal	Command Number
Channel	DINT	Decimal	Channel Number
Format_Cmd_status	DINT	Decimal	description of decimal places for each type of value, weight, rate, total.
Ch_Active	DINT	Decimal	Channel turned on
Metric	DINT	Decimal	Units of measure to report in Lb/oz/ton/Kg/g/metric ton
SpanWeight	DINT	Decimal	Calibration High Weight
CalLowWeight	DINT	Decimal	Calibration Low weight
ROCTimeBase	DINT	Decimal	Time base to calculate ROC
ROCTimeUnits	DINT	Decimal	Units to report ROC sec/min/hr
Averages	DINT	Decimal	Number of averages
WAVERSAVE	DINT	Decimal	WAVERSAVER setting for vibration
PID_P	DINT	Decimal	P value
PID_I	DINT	Decimal	I value
BatchAmount	DINT	Decimal	Batch amount if in batch mode.
Preact	DINT	Decimal	Preact amount for inflight material
mode	DINT	Decimal	Continuous/Batch
PrineTime	DINT	Decimal	Time for priming feeder at start of auto rate cal.
PauseTime	DINT	Decimal	Time between feed rate runs during auto rate cal.
FeedTime	DINT	Decimal	Feed time for auto rate calibrations
InitialRefillOn	DINT	Decimal	Initial refill ON/OFF
AutoRefillOn	DINT	Decimal	Auto refill ON/OFF
RefillStartWeight	DINT	Decimal	Start refill weight
RefillEndWeight	DINT	Decimal	Stop refill weight
RefillTooHighWeight	DINT	Decimal	High weight limit
RefillShutdownWeight	DINT	Decimal	Low weight limit
OpAdjust	DINT	Decimal	Refill adjust ON/OFF/LEARN
OpAdjustPercent	DINT	Decimal	correction to OP during refill
WaitTime	DINT	Decimal	Settle time
RECLevel	DINT	Decimal	REC level Percent of feed rate.
RECTime	DINT	Decimal	Time in REC before shutoff
REC_Shutdown	DINT	Decimal	Shutdown for REC alarm Y/N
ShutoffLoPercent	DINT	Decimal	Output percentage for shut off condition.
Total	DINT	Decimal	Total of all product since last cleared.
BatchTotal	DINT	Decimal	Total for last operation

Name	Data Type	Style	Description
LowAlarmShutDownRate	DINT	Decimal	Low rate limit
HighAlarmShutDownRate	DINT	Decimal	High rate limit
AlarmDelay	DINT	Decimal	Delay time for alarms
RateSetpoint	DINT	Decimal	Rate to run at
REC_P_Limit	DINT	Decimal	Limit for making adjustments on the output percentage
Spare0	DINT	Decimal	spare
Spare1	DINT	Decimal	spare
Spare2	DINT	Decimal	spare
Spare3	DINT	Decimal	spare
Spare4	DINT	Decimal	spare
Spare5	DINT	Decimal	spare
Spare6	DINT	Decimal	spare
Spare7	DINT	Decimal	spare
Spare8	DINT	Decimal	spare
Spare9	DINT	Decimal	spare
Spare10	DINT	Decimal	spare
Spare11	DINT	Decimal	spare
Spare12	DINT	Decimal	spare

Data type Name: Hardy_RC_Command

Description:

Size: 12 byte(s)

Name	Data Type	Style	Description
Command_No	INT	Decimal	Command Number
Format	INT	Decimal	Format of Decimal places
Data_0	INT	Decimal	Data LSW
Data_1	INT	Decimal	Data MSW
Param_ID	INT	Decimal	Parameter Id

Data type Name: Hardy_Simple_CMD

Description:

Size: 12 byte(s)

Name	Data Type	Style	Description
Command	DINT	Decimal	Command Number
Channel	DINT	Decimal	Channel number
Format_Status	DINT	Hex	Format for Dec/status

Data type Name: Hardy_test_tag

Description:

Size: 44 byte(s)

Name	Data Type	Style	Description
command_out	INT	Decimal	
format_out	INT	Decimal	
data_out_lsw	INT	Decimal	
data_out_msw	INT	Decimal	
param_id_out	INT	Decimal	
spare	INT	Decimal	
command_in	INT	Decimal	
status_in	INT	Decimal	
data_in_lsw	INT	Decimal	
data_in_msw	INT	Decimal	
param_id_in	INT	Decimal	
spare1	INT	Decimal	
setpoint	DINT	Decimal	
ROC	DINT	Decimal	
gross_we	DINT	Decimal	
op	INT	Decimal	
state	INT	Decimal	
status	INT	Hex	

Data type Name: h_string_instrument

Description:

Size: 16 byte(s)

Name	Data Type	Style	Description
LEN	DINT	Decimal	
DATA	SINT[11]	ASCII	

Data type Name: h_string_state

Description:

Size: 12 byte(s)

Name	Data Type	Style	Description
LEN	DINT	Decimal	
DATA	SINT[7]	ASCII	

Data type Name: STRING

Description:

Size: 88 byte(s)

Name	Data Type	Style	Description
LEN	DINT	Decimal	
DATA	SINT[82]	ASCII	

Data type Name: ALARM

Description:

Size: 96 byte(s)

Name	Data Type	Style	Description
EnableIn	BOOL	Decimal	
In	REAL	Float	
HHLimit	REAL	Float	
HLimit	REAL	Float	
LLimit	REAL	Float	
LLLimit	REAL	Float	
Deadband	REAL	Float	
ROCPosLimit	REAL	Float	
ROCNegLimit	REAL	Float	
ROCPeriod	REAL	Float	
EnableOut	BOOL	Decimal	
HHAlarm	BOOL	Decimal	
HAlarm	BOOL	Decimal	
LAlarm	BOOL	Decimal	
LLAlarm	BOOL	Decimal	
ROCPosAlarm	BOOL	Decimal	
ROCNegAlarm	BOOL	Decimal	
ROC	REAL	Float	
Status	DINT	Hex	
InstructFault	BOOL	Decimal	
DeadbandInv	BOOL	Decimal	
ROCPosLimitInv	BOOL	Decimal	
ROCNegLimitInv	BOOL	Decimal	
ROCPeriodInv	BOOL	Decimal	

Data type Name: ALARM_ANALOG

Description:

Size: 236 byte(s)

Name	Data Type	Style	Description
EnableIn	BOOL	Decimal	
In	REAL	Float	
InFault	BOOL	Decimal	
HHEnabled	BOOL	Decimal	
HEnabled	BOOL	Decimal	
LEnabled	BOOL	Decimal	
LLEnabled	BOOL	Decimal	
AckRequired	BOOL	Decimal	
ProgAckAll	BOOL	Decimal	
OperAckAll	BOOL	Decimal	
HHProgAck	BOOL	Decimal	
HHOperAck	BOOL	Decimal	
HProgAck	BOOL	Decimal	
HOperAck	BOOL	Decimal	
LProgAck	BOOL	Decimal	
LOperAck	BOOL	Decimal	
LLProgAck	BOOL	Decimal	
LLOperAck	BOOL	Decimal	
ROCPosProgAck	BOOL	Decimal	
ROCPosOperAck	BOOL	Decimal	
ROCNegProgAck	BOOL	Decimal	
ROCNegOperAck	BOOL	Decimal	
ProgSuppress	BOOL	Decimal	
OperSuppress	BOOL	Decimal	
ProgUnsuppress	BOOL	Decimal	
OperUnsuppress	BOOL	Decimal	
ProgDisable	BOOL	Decimal	
OperDisable	BOOL	Decimal	
ProgEnable	BOOL	Decimal	
OperEnable	BOOL	Decimal	
AlarmCountReset	BOOL	Decimal	
HHLimit	REAL	Float	
HHSeverity	DINT	Decimal	
HLimit	REAL	Float	
HSeverity	DINT	Decimal	
LLimit	REAL	Float	
LSeverity	DINT	Decimal	
LLLimit	REAL	Float	

Name	Data Type	Style	Description
LLSeverity	DINT	Decimal	
MinDurationPRE	DINT	Decimal	
Deadband	REAL	Float	
ROCPosLimit	REAL	Float	
ROCPosSeverity	DINT	Decimal	
ROCNegLimit	REAL	Float	
ROCNegSeverity	DINT	Decimal	
ROCPeriod	REAL	Float	
EnableOut	BOOL	Decimal	
InAlarm	BOOL	Decimal	
AnyInAlarmUnack	BOOL	Decimal	
HHInAlarm	BOOL	Decimal	
HInAlarm	BOOL	Decimal	
LInAlarm	BOOL	Decimal	
LLInAlarm	BOOL	Decimal	
ROCPosInAlarm	BOOL	Decimal	
ROCNegInAlarm	BOOL	Decimal	
ROC	REAL	Float	
HHAcked	BOOL	Decimal	
HAcked	BOOL	Decimal	
LAcked	BOOL	Decimal	
LLAcked	BOOL	Decimal	
ROCPosAcked	BOOL	Decimal	
ROCNegAcked	BOOL	Decimal	
HHInAlarmUnack	BOOL	Decimal	
HInAlarmUnack	BOOL	Decimal	
LInAlarmUnack	BOOL	Decimal	
LLInAlarmUnack	BOOL	Decimal	
ROCPosInAlarmUnack	BOOL	Decimal	
ROCNegInAlarmUnack	BOOL	Decimal	
Suppressed	BOOL	Decimal	
Disabled	BOOL	Decimal	
MinDurationACC	DINT	Decimal	
HHInAlarmTime	LINT	Date/Time	
HHAlarmCount	DINT	Decimal	
HInAlarmTime	LINT	Date/Time	
HAlarmCount	DINT	Decimal	
LInAlarmTime	LINT	Date/Time	

Name	Data Type	Style	Description
LAlarmCount	DINT	Decimal	
LLInAlarmTime	LINT	Date/Time	
LLAlarmCount	DINT	Decimal	
ROCPosInAlarmTime	LINT	Date/Time	
ROCPosAlarmCount	DINT	Decimal	
ROCNegInAlarmTime	LINT	Date/Time	
ROCNegAlarmCount	DINT	Decimal	
AckTime	LINT	Date/Time	
RetToNormalTime	LINT	Date/Time	
AlarmCountResetTime	LINT	Date/Time	
DeliveryER	BOOL	Decimal	
DeliveryDN	BOOL	Decimal	
DeliveryEN	BOOL	Decimal	
NoSubscriber	BOOL	Decimal	
NoConnection	BOOL	Decimal	
CommError	BOOL	Decimal	
AlarmBuffered	BOOL	Decimal	
Subscribers	DINT	Decimal	
SubscNotified	DINT	Decimal	
Status	DINT	Decimal	
InstructFault	BOOL	Decimal	
InFaulted	BOOL	Decimal	
SeverityInv	BOOL	Decimal	
AlarmLimitsInv	BOOL	Decimal	
DeadbandInv	BOOL	Decimal	
ROCPosLimitInv	BOOL	Decimal	
ROCNegLimitInv	BOOL	Decimal	
ROCPeriodInv	BOOL	Decimal	

Data type Name: ALARM_DIGITAL

Description:

Size: 120 byte(s)

Name	Data Type	Style	Description
EnableIn	BOOL	Decimal	
In	BOOL	Decimal	
InFault	BOOL	Decimal	
Condition	BOOL	Decimal	
AckRequired	BOOL	Decimal	
Latched	BOOL	Decimal	
ProgAck	BOOL	Decimal	
OperAck	BOOL	Decimal	
ProgReset	BOOL	Decimal	
OperReset	BOOL	Decimal	
ProgSuppress	BOOL	Decimal	
OperSuppress	BOOL	Decimal	
ProgUnsuppress	BOOL	Decimal	
OperUnsuppress	BOOL	Decimal	
ProgDisable	BOOL	Decimal	
OperDisable	BOOL	Decimal	
ProgEnable	BOOL	Decimal	
OperEnable	BOOL	Decimal	
AlarmCountReset	BOOL	Decimal	
UseProgTime	BOOL	Decimal	
ProgTime	LINT	Date/Time	
Severity	DINT	Decimal	
MinDurationPRE	DINT	Decimal	
EnableOut	BOOL	Decimal	
InAlarm	BOOL	Decimal	
Acked	BOOL	Decimal	
InAlarmUnack	BOOL	Decimal	
Suppressed	BOOL	Decimal	
Disabled	BOOL	Decimal	
MinDurationACC	DINT	Decimal	
AlarmCount	DINT	Decimal	
InAlarmTime	LINT	Date/Time	
AckTime	LINT	Date/Time	
RetToNormalTime	LINT	Date/Time	
AlarmCountResetTime	LINT	Date/Time	
DeliveryER	BOOL	Decimal	
DeliveryDN	BOOL	Decimal	
DeliveryEN	BOOL	Decimal	

Name	Data Type	Style	Description
NoSubscriber	BOOL	Decimal	
NoConnection	BOOL	Decimal	
CommError	BOOL	Decimal	
AlarmBuffered	BOOL	Decimal	
Subscribers	DINT	Decimal	
SubscNotified	DINT	Decimal	
Status	DINT	Decimal	
InstructFault	BOOL	Decimal	
InFaulted	BOOL	Decimal	
SeverityInv	BOOL	Decimal	

Data type Name: AUX_VALVE_CONTROL

Description:

Size: 68 byte(s)

Name	Data Type	Style	Description
EnableIn	BOOL	Decimal	
Actuate	BOOL	Decimal	
DelayType	BOOL	Decimal	
OutputFollowsActuate	BOOL	Decimal	
DelayEnable	BOOL	Decimal	
FeedbackType	BOOL	Decimal	
Feedback1	BOOL	Decimal	
InputStatus	BOOL	Decimal	
OutputStatus	BOOL	Decimal	
Reset	BOOL	Decimal	
DelayTime	DINT	Decimal	
FeedbackReactionTime	DINT	Decimal	
EnableOut	BOOL	Decimal	
O1	BOOL	Decimal	
FP	BOOL	Decimal	
FaultCode	DINT	Decimal	
DiagnosticCode	DINT	Decimal	

Data type Name: AXIS_CONSUMED

Description:

Size: 248 byte(s)

Name	Data Type	Style	Description
AxisFault	DINT	Hex	
PhysicalAxisFault	BOOL	Decimal	
ModuleFault	BOOL	Decimal	
ConfigFault	BOOL	Decimal	
AxisStatus	DINT	Hex	
ServoActionStatus	BOOL	Decimal	
DriveEnableStatus	BOOL	Decimal	
ShutdownStatus	BOOL	Decimal	
ConfigUpdateInProcess	BOOL	Decimal	
InhibitStatus	BOOL	Decimal	
MotionStatus	DINT	Hex	
AccelStatus	BOOL	Decimal	
DecelStatus	BOOL	Decimal	
MoveStatus	BOOL	Decimal	
JogStatus	BOOL	Decimal	
GearingStatus	BOOL	Decimal	
HomingStatus	BOOL	Decimal	
StoppingStatus	BOOL	Decimal	
AxisHomedStatus	BOOL	Decimal	
PositionCamStatus	BOOL	Decimal	
TimeCamStatus	BOOL	Decimal	
PositionCamPendingStatus	BOOL	Decimal	
TimeCamPendingStatus	BOOL	Decimal	
GearingLockStatus	BOOL	Decimal	
PositionCamLockStatus	BOOL	Decimal	
MasterOffsetMoveStatus	BOOL	Decimal	
CoordinatedMotionStatus	BOOL	Decimal	
TransformStateStatus	BOOL	Decimal	
ControlledByTransformStatus	BOOL	Decimal	
AxisEvent	DINT	Hex	
WatchEventArmedStatus	BOOL	Decimal	
WatchEventStatus	BOOL	Decimal	
RegEvent1ArmedStatus	BOOL	Decimal	
RegEvent1Status	BOOL	Decimal	
RegEvent2ArmedStatus	BOOL	Decimal	
RegEvent2Status	BOOL	Decimal	
HomeEventArmedStatus	BOOL	Decimal	
HomeEventStatus	BOOL	Decimal	

Name	Data Type	Style	Description
OutputCamStatus	DINT	Hex	
OutputCamPendingStatus	DINT	Hex	
OutputCamLockStatus	DINT	Hex	
OutputCamTransitionStatus	DINT	Hex	
ActualPosition	REAL	Float	
StrobeActualPosition	REAL	Float	
StartActualPosition	REAL	Float	
AverageVelocity	REAL	Float	
ActualVelocity	REAL	Float	
ActualAcceleration	REAL	Float	
WatchPosition	REAL	Float	
Registration1Position	REAL	Float	
Registration2Position	REAL	Float	
Registration1Time	DINT	Decimal	
Registration2Time	DINT	Decimal	
InterpolationTime	DINT	Decimal	
InterpolatedActualPosition	REAL	Float	
MasterOffset	REAL	Float	
StrobeMasterOffset	REAL	Float	
StartMasterOffset	REAL	Float	
CommandPosition	REAL	Float	
StrobeCommandPosition	REAL	Float	
StartCommandPosition	REAL	Float	
CommandVelocity	REAL	Float	
CommandAcceleration	REAL	Float	
InterpolatedCommandPosition	REAL	Float	
ModuleFaults	DINT	Hex	
ControlSyncFault	BOOL	Decimal	

Data type Name: AXIS_GENERIC

Description:

Size: 248 byte(s)

Name	Data Type	Style	Description
AxisFault	DINT	Hex	
PhysicalAxisFault	BOOL	Decimal	
ModuleFault	BOOL	Decimal	
ConfigFault	BOOL	Decimal	
AxisStatus	DINT	Hex	
ServoActionStatus	BOOL	Decimal	
DriveEnableStatus	BOOL	Decimal	
ShutdownStatus	BOOL	Decimal	
ConfigUpdateInProcess	BOOL	Decimal	
InhibitStatus	BOOL	Decimal	
MotionStatus	DINT	Hex	
AccelStatus	BOOL	Decimal	
DecelStatus	BOOL	Decimal	
MoveStatus	BOOL	Decimal	
JogStatus	BOOL	Decimal	
GearingStatus	BOOL	Decimal	
HomingStatus	BOOL	Decimal	
StoppingStatus	BOOL	Decimal	
AxisHomedStatus	BOOL	Decimal	
PositionCamStatus	BOOL	Decimal	
TimeCamStatus	BOOL	Decimal	
PositionCamPendingStatus	BOOL	Decimal	
TimeCamPendingStatus	BOOL	Decimal	
GearingLockStatus	BOOL	Decimal	
PositionCamLockStatus	BOOL	Decimal	
MasterOffsetMoveStatus	BOOL	Decimal	
CoordinatedMotionStatus	BOOL	Decimal	
TransformStateStatus	BOOL	Decimal	
ControlledByTransformStatus	BOOL	Decimal	
AxisEvent	DINT	Hex	
WatchEventArmedStatus	BOOL	Decimal	
WatchEventStatus	BOOL	Decimal	
RegEvent1ArmedStatus	BOOL	Decimal	
RegEvent1Status	BOOL	Decimal	
RegEvent2ArmedStatus	BOOL	Decimal	
RegEvent2Status	BOOL	Decimal	
HomeEventArmedStatus	BOOL	Decimal	
HomeEventStatus	BOOL	Decimal	

Name	Data Type	Style	Description
OutputCamStatus	DINT	Hex	
OutputCamPendingStatus	DINT	Hex	
OutputCamLockStatus	DINT	Hex	
OutputCamTransitionStatus	DINT	Hex	
ActualPosition	REAL	Float	
StrobeActualPosition	REAL	Float	
StartActualPosition	REAL	Float	
AverageVelocity	REAL	Float	
ActualVelocity	REAL	Float	
ActualAcceleration	REAL	Float	
WatchPosition	REAL	Float	
Registration1Position	REAL	Float	
Registration2Position	REAL	Float	
Registration1Time	DINT	Decimal	
Registration2Time	DINT	Decimal	
InterpolationTime	DINT	Decimal	
InterpolatedActualPosition	REAL	Float	
MasterOffset	REAL	Float	
StrobeMasterOffset	REAL	Float	
StartMasterOffset	REAL	Float	
CommandPosition	REAL	Float	
StrobeCommandPosition	REAL	Float	
StartCommandPosition	REAL	Float	
CommandVelocity	REAL	Float	
CommandAcceleration	REAL	Float	
InterpolatedCommandPosition	REAL	Float	

Data type Name: AXIS_GENERIC_DRIVE

Description:

Size: 324 byte(s)

Name	Data Type	Style	Description
AxisFault	DINT	Hex	
PhysicalAxisFault	BOOL	Decimal	
ModuleFault	BOOL	Decimal	
ConfigFault	BOOL	Decimal	
AxisStatus	DINT	Hex	
ServoActionStatus	BOOL	Decimal	
DriveEnableStatus	BOOL	Decimal	
ShutdownStatus	BOOL	Decimal	
ConfigUpdateInProcess	BOOL	Decimal	
InhibitStatus	BOOL	Decimal	
MotionStatus	DINT	Hex	
AccelStatus	BOOL	Decimal	
DecelStatus	BOOL	Decimal	
MoveStatus	BOOL	Decimal	
JogStatus	BOOL	Decimal	
GearingStatus	BOOL	Decimal	
HomingStatus	BOOL	Decimal	
StoppingStatus	BOOL	Decimal	
AxisHomedStatus	BOOL	Decimal	
PositionCamStatus	BOOL	Decimal	
TimeCamStatus	BOOL	Decimal	
PositionCamPendingStatus	BOOL	Decimal	
TimeCamPendingStatus	BOOL	Decimal	
GearingLockStatus	BOOL	Decimal	
PositionCamLockStatus	BOOL	Decimal	
MasterOffsetMoveStatus	BOOL	Decimal	
CoordinatedMotionStatus	BOOL	Decimal	
TransformStateStatus	BOOL	Decimal	
ControlledByTransformStatus	BOOL	Decimal	
AxisEvent	DINT	Hex	
WatchEventArmedStatus	BOOL	Decimal	
WatchEventStatus	BOOL	Decimal	
RegEvent1ArmedStatus	BOOL	Decimal	
RegEvent1Status	BOOL	Decimal	
RegEvent2ArmedStatus	BOOL	Decimal	
RegEvent2Status	BOOL	Decimal	
HomeEventArmedStatus	BOOL	Decimal	
HomeEventStatus	BOOL	Decimal	

Name	Data Type	Style	Description
OutputCamStatus	DINT	Hex	
OutputCamPendingStatus	DINT	Hex	
OutputCamLockStatus	DINT	Hex	
OutputCamTransitionStatus	DINT	Hex	
ActualPosition	REAL	Float	
StrobeActualPosition	REAL	Float	
StartActualPosition	REAL	Float	
AverageVelocity	REAL	Float	
ActualVelocity	REAL	Float	
ActualAcceleration	REAL	Float	
WatchPosition	REAL	Float	
Registration1Position	REAL	Float	
Registration2Position	REAL	Float	
Registration1Time	DINT	Decimal	
Registration2Time	DINT	Decimal	
InterpolationTime	DINT	Decimal	
InterpolatedActualPosition	REAL	Float	
MasterOffset	REAL	Float	
StrobeMasterOffset	REAL	Float	
StartMasterOffset	REAL	Float	
CommandPosition	REAL	Float	
StrobeCommandPosition	REAL	Float	
StartCommandPosition	REAL	Float	
CommandVelocity	REAL	Float	
CommandAcceleration	REAL	Float	
InterpolatedCommandPosition	REAL	Float	
ModuleFaults	DINT	Hex	
ControlSyncFault	BOOL	Decimal	
ModuleSyncFault	BOOL	Decimal	
TimerEventFault	BOOL	Decimal	
ModuleHardwareFault	BOOL	Decimal	
SERCOSRingFault	BOOL	Decimal	
AttributeErrorCode	INT	Hex	
AttributeErrorID	INT	Hex	
DriveStatus	DINT	Hex	
VelocityLockStatus	BOOL	Decimal	
VelocityStandstillStatus	BOOL	Decimal	
VelocityThresholdStatus	BOOL	Decimal	

Name	Data Type	Style	Description
TorqueThresholdStatus	BOOL	Decimal	
TorqueLimitStatus	BOOL	Decimal	
VelocityLimitStatus	BOOL	Decimal	
PositionLockStatus	BOOL	Decimal	
PowerLimitStatus	BOOL	Decimal	
LowVelocityThresholdStatus	BOOL	Decimal	
HighVelocityThresholdStatus	BOOL	Decimal	
DriveFault	DINT	Hex	
OverloadFault	BOOL	Decimal	
DriveOvertempFault	BOOL	Decimal	
MotorOvertempFault	BOOL	Decimal	
DriveCoolingFault	BOOL	Decimal	
DriveControlVoltageFault	BOOL	Decimal	
FeedbackFault	BOOL	Decimal	
CommutationFault	BOOL	Decimal	
DriveOvercurrentFault	BOOL	Decimal	
DriveOvervoltageFault	BOOL	Decimal	
DriveUndervoltageFault	BOOL	Decimal	
PowerPhaseLossFault	BOOL	Decimal	
PositionErrorFault	BOOL	Decimal	
SERCOSFault	BOOL	Decimal	
OvertravelFault	BOOL	Decimal	
ManufacturerSpecificFault	BOOL	Decimal	
SERCOSErrorCode	INT	Hex	

Data type Name: AXIS_SERVO

Description:

Size: 248 byte(s)

Name	Data Type	Style	Description
AxisFault	DINT	Hex	
PhysicalAxisFault	BOOL	Decimal	
ModuleFault	BOOL	Decimal	
ConfigFault	BOOL	Decimal	
AxisStatus	DINT	Hex	
ServoActionStatus	BOOL	Decimal	
DriveEnableStatus	BOOL	Decimal	
ShutdownStatus	BOOL	Decimal	
ConfigUpdateInProcess	BOOL	Decimal	
InhibitStatus	BOOL	Decimal	
MotionStatus	DINT	Hex	
AccelStatus	BOOL	Decimal	
DecelStatus	BOOL	Decimal	
MoveStatus	BOOL	Decimal	
JogStatus	BOOL	Decimal	
GearingStatus	BOOL	Decimal	
HomingStatus	BOOL	Decimal	
StoppingStatus	BOOL	Decimal	
AxisHomedStatus	BOOL	Decimal	
PositionCamStatus	BOOL	Decimal	
TimeCamStatus	BOOL	Decimal	
PositionCamPendingStatus	BOOL	Decimal	
TimeCamPendingStatus	BOOL	Decimal	
GearingLockStatus	BOOL	Decimal	
PositionCamLockStatus	BOOL	Decimal	
MasterOffsetMoveStatus	BOOL	Decimal	
CoordinatedMotionStatus	BOOL	Decimal	
TransformStateStatus	BOOL	Decimal	
ControlledByTransformStatus	BOOL	Decimal	
AxisEvent	DINT	Hex	
WatchEventArmedStatus	BOOL	Decimal	
WatchEventStatus	BOOL	Decimal	
RegEvent1ArmedStatus	BOOL	Decimal	
RegEvent1Status	BOOL	Decimal	
RegEvent2ArmedStatus	BOOL	Decimal	
RegEvent2Status	BOOL	Decimal	
HomeEventArmedStatus	BOOL	Decimal	
HomeEventStatus	BOOL	Decimal	

Name	Data Type	Style	Description
OutputCamStatus	DINT	Hex	
OutputCamPendingStatus	DINT	Hex	
OutputCamLockStatus	DINT	Hex	
OutputCamTransitionStatus	DINT	Hex	
ActualPosition	REAL	Float	
StrobeActualPosition	REAL	Float	
StartActualPosition	REAL	Float	
AverageVelocity	REAL	Float	
ActualVelocity	REAL	Float	
ActualAcceleration	REAL	Float	
WatchPosition	REAL	Float	
Registration1Position	REAL	Float	
Registration2Position	REAL	Float	
Registration1Time	DINT	Decimal	
Registration2Time	DINT	Decimal	
InterpolationTime	DINT	Decimal	
InterpolatedActualPosition	REAL	Float	
MasterOffset	REAL	Float	
StrobeMasterOffset	REAL	Float	
StartMasterOffset	REAL	Float	
CommandPosition	REAL	Float	
StrobeCommandPosition	REAL	Float	
StartCommandPosition	REAL	Float	
CommandVelocity	REAL	Float	
CommandAcceleration	REAL	Float	
InterpolatedCommandPosition	REAL	Float	
ServoStatus	DINT	Hex	
ProcessStatus	BOOL	Decimal	
OutputLimitStatus	BOOL	Decimal	
PositionLockStatus	BOOL	Decimal	
HomeInputStatus	BOOL	Decimal	
Reg1InputStatus	BOOL	Decimal	
Reg2InputStatus	BOOL	Decimal	
DriveFaultInputStatus	BOOL	Decimal	
ServoFault	DINT	Hex	
PosSoftOvertravelFault	BOOL	Decimal	
NegSoftOvertravelFault	BOOL	Decimal	
FeedbackFault	BOOL	Decimal	

Name	Data Type	Style	Description
FeedbackNoiseFault	BOOL	Decimal	
PositionErrorFault	BOOL	Decimal	
DriveFault	BOOL	Decimal	
ModuleFaults	DINT	Hex	
ControlSyncFault	BOOL	Decimal	
ModuleSyncFault	BOOL	Decimal	
TimerEventFault	BOOL	Decimal	
ModuleHardwareFault	BOOL	Decimal	
InterModuleSyncFault	BOOL	Decimal	
AttributeErrorCode	INT	Hex	
AttributeErrorID	INT	Hex	
PositionCommand	REAL	Float	
PositionFeedback	REAL	Float	
AuxPositionFeedback	REAL	Float	
PositionError	REAL	Float	
PositionIntegratorError	REAL	Float	
VelocityCommand	REAL	Float	
VelocityFeedback	REAL	Float	
VelocityError	REAL	Float	
VelocityIntegratorError	REAL	Float	
AccelerationCommand	REAL	Float	
AccelerationFeedback	REAL	Float	
ServoOutputLevel	REAL	Float	
MarkerDistance	REAL	Float	
VelocityOffset	REAL	Float	
TorqueOffset	REAL	Float	

Data type Name: AXIS_SERVO_DRIVE

Description:

Size: 324 byte(s)

Name	Data Type	Style	Description
AxisFault	DINT	Hex	
PhysicalAxisFault	BOOL	Decimal	
ModuleFault	BOOL	Decimal	
ConfigFault	BOOL	Decimal	
AxisStatus	DINT	Hex	
ServoActionStatus	BOOL	Decimal	
DriveEnableStatus	BOOL	Decimal	
ShutdownStatus	BOOL	Decimal	
ConfigUpdateInProcess	BOOL	Decimal	
InhibitStatus	BOOL	Decimal	
MotionStatus	DINT	Hex	
AccelStatus	BOOL	Decimal	
DecelStatus	BOOL	Decimal	
MoveStatus	BOOL	Decimal	
JogStatus	BOOL	Decimal	
GearingStatus	BOOL	Decimal	
HomingStatus	BOOL	Decimal	
StoppingStatus	BOOL	Decimal	
AxisHomedStatus	BOOL	Decimal	
PositionCamStatus	BOOL	Decimal	
TimeCamStatus	BOOL	Decimal	
PositionCamPendingStatus	BOOL	Decimal	
TimeCamPendingStatus	BOOL	Decimal	
GearingLockStatus	BOOL	Decimal	
PositionCamLockStatus	BOOL	Decimal	
MasterOffsetMoveStatus	BOOL	Decimal	
CoordinatedMotionStatus	BOOL	Decimal	
TransformStateStatus	BOOL	Decimal	
ControlledByTransformStatus	BOOL	Decimal	
AxisEvent	DINT	Hex	
WatchEventArmedStatus	BOOL	Decimal	
WatchEventStatus	BOOL	Decimal	
RegEvent1ArmedStatus	BOOL	Decimal	
RegEvent1Status	BOOL	Decimal	
RegEvent2ArmedStatus	BOOL	Decimal	
RegEvent2Status	BOOL	Decimal	
HomeEventArmedStatus	BOOL	Decimal	
HomeEventStatus	BOOL	Decimal	

Name	Data Type	Style	Description
OutputCamStatus	DINT	Hex	
OutputCamPendingStatus	DINT	Hex	
OutputCamLockStatus	DINT	Hex	
OutputCamTransitionStatus	DINT	Hex	
ActualPosition	REAL	Float	
StrobeActualPosition	REAL	Float	
StartActualPosition	REAL	Float	
AverageVelocity	REAL	Float	
ActualVelocity	REAL	Float	
ActualAcceleration	REAL	Float	
WatchPosition	REAL	Float	
Registration1Position	REAL	Float	
Registration2Position	REAL	Float	
Registration1Time	DINT	Decimal	
Registration2Time	DINT	Decimal	
InterpolationTime	DINT	Decimal	
InterpolatedActualPosition	REAL	Float	
MasterOffset	REAL	Float	
StrobeMasterOffset	REAL	Float	
StartMasterOffset	REAL	Float	
CommandPosition	REAL	Float	
StrobeCommandPosition	REAL	Float	
StartCommandPosition	REAL	Float	
CommandVelocity	REAL	Float	
CommandAcceleration	REAL	Float	
InterpolatedCommandPosition	REAL	Float	
ModuleFaults	DINT	Hex	
ControlSyncFault	BOOL	Decimal	
ModuleSyncFault	BOOL	Decimal	
TimerEventFault	BOOL	Decimal	
ModuleHardwareFault	BOOL	Decimal	
SERCOSRingFault	BOOL	Decimal	
AttributeErrorCode	INT	Hex	
AttributeErrorID	INT	Hex	
PositionCommand	REAL	Float	
PositionFeedback	REAL	Float	
AuxPositionFeedback	REAL	Float	
PositionError	REAL	Float	

Name	Data Type	Style	Description
PositionIntegratorError	REAL	Float	
VelocityCommand	REAL	Float	
VelocityFeedback	REAL	Float	
VelocityError	REAL	Float	
VelocityIntegratorError	REAL	Float	
AccelerationCommand	REAL	Float	
AccelerationFeedback	REAL	Float	
MarkerDistance	REAL	Float	
VelocityOffset	REAL	Float	
TorqueOffset	REAL	Float	
TorqueCommand	REAL	Float	
TorqueFeedback	REAL	Float	
PosDynamicTorqueLimit	REAL	Float	
NegDynamicTorqueLimit	REAL	Float	
MotorCapacity	REAL	Float	
DriveCapacity	REAL	Float	
PowerCapacity	REAL	Float	
BusRegulatorCapacity	REAL	Float	
MotorElectricalAngle	REAL	Float	
TorqueLimitSource	DINT	Hex	
DCBusVoltage	DINT	Decimal	
AnalogInput1	REAL	Float	
AnalogInput2	REAL	Float	
DriveStatus	DINT	Hex	
ProcessStatus	BOOL	Decimal	
BusReadyStatus	BOOL	Decimal	
HomeInputStatus	BOOL	Decimal	
Reg1InputStatus	BOOL	Decimal	
Reg2InputStatus	BOOL	Decimal	
PosOvertravelInputStatus	BOOL	Decimal	
NegOvertravelInputStatus	BOOL	Decimal	
EnableInputStatus	BOOL	Decimal	
AccelLimitStatus	BOOL	Decimal	
AbsoluteReferenceStatus	BOOL	Decimal	
SafeOffModeActiveStatus	BOOL	Decimal	
VelocityLockStatus	BOOL	Decimal	
VelocityStandstillStatus	BOOL	Decimal	
VelocityThresholdStatus	BOOL	Decimal	

Name	Data Type	Style	Description
TorqueThresholdStatus	BOOL	Decimal	
TorqueLimitStatus	BOOL	Decimal	
VelocityLimitStatus	BOOL	Decimal	
PositionLockStatus	BOOL	Decimal	
PowerLimitStatus	BOOL	Decimal	
LowVelocityThresholdStatus	BOOL	Decimal	
HighVelocityThresholdStatus	BOOL	Decimal	
DriveFault	DINT	Hex	
PosSoftOvertravelFault	BOOL	Decimal	
NegSoftOvertravelFault	BOOL	Decimal	
PosHardOvertravelFault	BOOL	Decimal	
NegHardOvertravelFault	BOOL	Decimal	
MotFeedbackFault	BOOL	Decimal	
MotFeedbackNoiseFault	BOOL	Decimal	
AuxFeedbackFault	BOOL	Decimal	
AuxFeedbackNoiseFault	BOOL	Decimal	
DriveEnableInputFault	BOOL	Decimal	
CommonBusFault	BOOL	Decimal	
PreChargeOverloadFault	BOOL	Decimal	
GuardFaultExists	BOOL	Decimal	
GroundShortFault	BOOL	Decimal	
DriveHardFault	BOOL	Decimal	
OverSpeedFault	BOOL	Decimal	
OverloadFault	BOOL	Decimal	
DriveOvertempFault	BOOL	Decimal	
MotorOvertempFault	BOOL	Decimal	
DriveCoolingFault	BOOL	Decimal	
DriveControlVoltageFault	BOOL	Decimal	
FeedbackFault	BOOL	Decimal	
CommutationFault	BOOL	Decimal	
DriveOvercurrentFault	BOOL	Decimal	
DriveOvervoltageFault	BOOL	Decimal	
DriveUndervoltageFault	BOOL	Decimal	
PowerPhaseLossFault	BOOL	Decimal	
PositionErrorFault	BOOL	Decimal	
SERCOSFault	BOOL	Decimal	
SERCOSErrorCode	INT	Hex	
GuardStatus	DINT	Hex	

Name	Data Type	Style	Description
GuardOKStatus	BOOL	Decimal	
GuardConfigLockedStatus	BOOL	Decimal	
GuardGateDriveOutputStatus	BOOL	Decimal	
GuardStopInputStatus	BOOL	Decimal	
GuardStopRequestStatus	BOOL	Decimal	
GuardStopInProgressStatus	BOOL	Decimal	
GuardStopDecelStatus	BOOL	Decimal	
GuardStopStandstillStatus	BOOL	Decimal	
GuardStopOutputStatus	BOOL	Decimal	
GuardLimitedSpeedInputStatus	BOOL	Decimal	
GuardLimitedSpeedRequestStatus	BOOL	Decimal	
GuardLimitedSpeedMonitorInProgressStatus	BOOL	Decimal	
GuardLimitedSpeedOutputStatus	BOOL	Decimal	
GuardMaxSpeedMonitorInProgressStatus	BOOL	Decimal	
GuardMaxAccelMonitorInProgressStatus	BOOL	Decimal	
GuardDirectionMonitorInProgressStatus	BOOL	Decimal	
GuardDoorControlLockStatus	BOOL	Decimal	
GuardDoorControlOutputStatus	BOOL	Decimal	
GuardDoorMonitorInputStatus	BOOL	Decimal	
GuardDoorMonitorInProgressStatus	BOOL	Decimal	
GuardLockMonitorInputStatus	BOOL	Decimal	
GuardEnablingSwitchInputStatus	BOOL	Decimal	
GuardEnablingSwitchInProgressStatus	BOOL	Decimal	
GuardResetInputStatus	BOOL	Decimal	
GuardResetRequiredStatus	BOOL	Decimal	
GuardStopInputCycleRequiredStatus	BOOL	Decimal	
GuardFaults	DINT	Hex	
GuardInternalFault	BOOL	Decimal	
GuardConfigurationFault	BOOL	Decimal	
GuardGateDriveFault	BOOL	Decimal	
GuardResetFault	BOOL	Decimal	
GuardFeedback1Fault	BOOL	Decimal	
GuardFeedback2Fault	BOOL	Decimal	
GuardFeedbackSpeedCompareFault	BOOL	Decimal	
GuardFeedbackPositionCompareFault	BOOL	Decimal	

Name	Data Type	Style	Description
GuardStopInputFault	BOOL	Decimal	
GuardStopOutputFault	BOOL	Decimal	
GuardStopDecelFault	BOOL	Decimal	
GuardStopStandstillFault	BOOL	Decimal	
GuardStopMotionFault	BOOL	Decimal	
GuardLimitedSpeedInputFault	BOOL	Decimal	
GuardLimitedSpeedOutputFault	BOOL	Decimal	
GuardLimitedSpeedMonitorFault	BOOL	Decimal	
GuardMaxSpeedMonitorFault	BOOL	Decimal	
GuardMaxAccelMonitorFault	BOOL	Decimal	
GuardDirectionMonitorFault	BOOL	Decimal	
GuardDoorMonitorInputFault	BOOL	Decimal	
GuardDoorMonitorFault	BOOL	Decimal	
GuardDoorControlOutputFault	BOOL	Decimal	
GuardLockMonitorInputFault	BOOL	Decimal	
GuardLockMonitorFault	BOOL	Decimal	
GuardEnablingSwitchMonitorInputFault	BOOL	Decimal	
GuardEnablingSwitchMonitorFault	BOOL	Decimal	
GuardFeedback1VoltageMonitorFault	BOOL	Decimal	
GuardFeedback2VoltageMonitorFault	BOOL	Decimal	

Data type Name: AXIS_VIRTUAL

Description:

Size: 248 byte(s)

Name	Data Type	Style	Description
AxisFault	DINT	Hex	
PhysicalAxisFault	BOOL	Decimal	
ModuleFault	BOOL	Decimal	
ConfigFault	BOOL	Decimal	
AxisStatus	DINT	Hex	
ServoActionStatus	BOOL	Decimal	
DriveEnableStatus	BOOL	Decimal	
ShutdownStatus	BOOL	Decimal	
ConfigUpdateInProcess	BOOL	Decimal	
InhibitStatus	BOOL	Decimal	
MotionStatus	DINT	Hex	
AccelStatus	BOOL	Decimal	
DecelStatus	BOOL	Decimal	
MoveStatus	BOOL	Decimal	
JogStatus	BOOL	Decimal	
GearingStatus	BOOL	Decimal	
HomingStatus	BOOL	Decimal	
StoppingStatus	BOOL	Decimal	
AxisHomedStatus	BOOL	Decimal	
PositionCamStatus	BOOL	Decimal	
TimeCamStatus	BOOL	Decimal	
PositionCamPendingStatus	BOOL	Decimal	
TimeCamPendingStatus	BOOL	Decimal	
GearingLockStatus	BOOL	Decimal	
PositionCamLockStatus	BOOL	Decimal	
MasterOffsetMoveStatus	BOOL	Decimal	
CoordinatedMotionStatus	BOOL	Decimal	
TransformStateStatus	BOOL	Decimal	
ControlledByTransformStatus	BOOL	Decimal	
AxisEvent	DINT	Hex	
WatchEventArmedStatus	BOOL	Decimal	
WatchEventStatus	BOOL	Decimal	
RegEvent1ArmedStatus	BOOL	Decimal	
RegEvent1Status	BOOL	Decimal	
RegEvent2ArmedStatus	BOOL	Decimal	
RegEvent2Status	BOOL	Decimal	
HomeEventArmedStatus	BOOL	Decimal	
HomeEventStatus	BOOL	Decimal	

Name	Data Type	Style	Description
OutputCamStatus	DINT	Hex	
OutputCamPendingStatus	DINT	Hex	
OutputCamLockStatus	DINT	Hex	
OutputCamTransitionStatus	DINT	Hex	
ActualPosition	REAL	Float	
StrobeActualPosition	REAL	Float	
StartActualPosition	REAL	Float	
AverageVelocity	REAL	Float	
ActualVelocity	REAL	Float	
ActualAcceleration	REAL	Float	
WatchPosition	REAL	Float	
Registration1Position	REAL	Float	
Registration2Position	REAL	Float	
Registration1Time	DINT	Decimal	
Registration2Time	DINT	Decimal	
InterpolationTime	DINT	Decimal	
InterpolatedActualPosition	REAL	Float	
MasterOffset	REAL	Float	
StrobeMasterOffset	REAL	Float	
StartMasterOffset	REAL	Float	
CommandPosition	REAL	Float	
StrobeCommandPosition	REAL	Float	
StartCommandPosition	REAL	Float	
CommandVelocity	REAL	Float	
CommandAcceleration	REAL	Float	
InterpolatedCommandPosition	REAL	Float	

Data type Name: CAM

Description:

Size: 12 byte(s)

Name	Data Type	Style	Description
Master	REAL	Float	
Slave	REAL	Float	
SegmentType	DINT	Decimal	

Data type Name: CAMSHAFT_MONITOR

Description:

Size: 92 byte(s)

Name	Data Type	Style	Description
EnableIn	BOOL	Decimal	
MotionRequest	BOOL	Decimal	
ChannelA	BOOL	Decimal	
ChannelB	BOOL	Decimal	
InputStatus	BOOL	Decimal	
Reset	BOOL	Decimal	
MechanicalDelayTime	DINT	Decimal	
MaxPulsePeriod	DINT	Decimal	
EnableOut	BOOL	Decimal	
O1	BOOL	Decimal	
FP	BOOL	Decimal	
MeasuredStartTime	DINT	Decimal	
MeasuredStopTime	DINT	Decimal	
FaultCode	DINT	Decimal	
DiagnosticCode	DINT	Decimal	

Data type Name: CAM_PROFILE

Description:

Size: 56 byte(s)

Name	Data Type	Style	Description
Status	DINT	Decimal	

Data type Name: CB_CONTINUOUS_MODE

Description:

Size: 52 byte(s)

Name	Data Type	Style	Description
EnableIn	BOOL	Decimal	
AckType	BOOL	Decimal	
TakeoverMode	BOOL	Decimal	
Enable	BOOL	Decimal	
SafetyEnable	BOOL	Decimal	
StandardEnable	BOOL	Decimal	
ArmContinuous	BOOL	Decimal	
Start	BOOL	Decimal	
StopAtTop	BOOL	Decimal	
PressInMotion	BOOL	Decimal	
MotionMonitorFault	BOOL	Decimal	
SafetyEnableAck	BOOL	Decimal	
Mode	DINT	Decimal	
SlideZone	DINT	Decimal	
EnableOut	BOOL	Decimal	
O1	BOOL	Decimal	
CA	BOOL	Decimal	
DiagnosticCode	DINT	Decimal	

Data type Name: CB_CRANKSHAFT_POS_MONITOR

Description:

Size: 48 byte(s)

Name	Data Type	Style	Description
EnableIn	BOOL	Decimal	
CamProfile	BOOL	Decimal	
Enable	BOOL	Decimal	
BrakeCam	BOOL	Decimal	
TakeoverCam	BOOL	Decimal	
DynamicCam	BOOL	Decimal	
InputStatus	BOOL	Decimal	
Reverse	BOOL	Decimal	
Reset	BOOL	Decimal	
PressMotionStatus	BOOL	Decimal	
EnableOut	BOOL	Decimal	
TZ	BOOL	Decimal	
DZ	BOOL	Decimal	
UZ	BOOL	Decimal	
FP	BOOL	Decimal	
SlideZone	DINT	Decimal	
FaultCode	DINT	Decimal	
DiagnosticCode	DINT	Decimal	

Data type Name: CB_INCH_MODE

Description:

Size: 44 byte(s)

Name	Data Type	Style	Description
EnableIn	BOOL	Decimal	
AckType	BOOL	Decimal	
Enable	BOOL	Decimal	
SafetyEnable	BOOL	Decimal	
StandardEnable	BOOL	Decimal	
Start	BOOL	Decimal	
PressInMotion	BOOL	Decimal	
MotionMonitorFault	BOOL	Decimal	
SafetyEnableAck	BOOL	Decimal	
SlideZone	DINT	Decimal	
InchTime	DINT	Decimal	
EnableOut	BOOL	Decimal	
O1	BOOL	Decimal	
DiagnosticCode	DINT	Decimal	

Data type Name: CB_SINGLE_STROKE_MODE

Description:

Size: 36 byte(s)

Name	Data Type	Style	Description
EnableIn	BOOL	Decimal	
AckType	BOOL	Decimal	
TakeoverMode	BOOL	Decimal	
Enable	BOOL	Decimal	
SafetyEnable	BOOL	Decimal	
StandardEnable	BOOL	Decimal	
Start	BOOL	Decimal	
PressInMotion	BOOL	Decimal	
MotionMonitorFault	BOOL	Decimal	
SafetyEnableAck	BOOL	Decimal	
SlideZone	DINT	Decimal	
EnableOut	BOOL	Decimal	
O1	BOOL	Decimal	
DiagnosticCode	DINT	Decimal	

Data type Name: CC

Description:

Size: 8692 byte(s)

Name	Data Type	Style	Description
EnableIn	BOOL	Decimal	
PV	REAL	Float	
PVFault	BOOL	Decimal	
PVEUMax	REAL	Float	
PVEUMin	REAL	Float	
SPProg	REAL	Float	
SPOper	REAL	Float	
SPHLimit	REAL	Float	
SPLLimit	REAL	Float	
CV1Fault	BOOL	Decimal	
CV2Fault	BOOL	Decimal	
CV3Fault	BOOL	Decimal	
CV1InitReq	BOOL	Decimal	
CV2InitReq	BOOL	Decimal	
CV3InitReq	BOOL	Decimal	
CV1InitValue	REAL	Float	
CV2InitValue	REAL	Float	
CV3InitValue	REAL	Float	
CV1Prog	REAL	Float	
CV2Prog	REAL	Float	
CV3Prog	REAL	Float	
CV1Oper	REAL	Float	
CV2Oper	REAL	Float	
CV3Oper	REAL	Float	
CV1OverrideValue	REAL	Float	
CV2OverrideValue	REAL	Float	
CV3OverrideValue	REAL	Float	
CV1TrackValue	REAL	Float	
CV2TrackValue	REAL	Float	
CV3TrackValue	REAL	Float	
CVManLimiting	BOOL	Decimal	
CV1EUMax	REAL	Float	
CV2EUMax	REAL	Float	
CV3EUMax	REAL	Float	
CV1EUMin	REAL	Float	
CV2EUMin	REAL	Float	
CV3EUMin	REAL	Float	
CV1HLimit	REAL	Float	

Name	Data Type	Style	Description
CV2HLimit	REAL	Float	
CV3HLimit	REAL	Float	
CV1LLimit	REAL	Float	
CV2LLimit	REAL	Float	
CV3LLimit	REAL	Float	
CV1ROCPosLimit	REAL	Float	
CV2ROCPosLimit	REAL	Float	
CV3ROCPosLimit	REAL	Float	
CV1ROCNegLimit	REAL	Float	
CV2ROCNegLimit	REAL	Float	
CV3ROCNegLimit	REAL	Float	
CV1HandFB	REAL	Float	
CV2HandFB	REAL	Float	
CV3HandFB	REAL	Float	
CV1HandFBFault	BOOL	Decimal	
CV2HandFBFault	BOOL	Decimal	
CV3HandFBFault	BOOL	Decimal	
CV1Target	REAL	Float	
CV2Target	REAL	Float	
CV3Target	REAL	Float	
CV1WindupHIn	BOOL	Decimal	
CV2WindupHIn	BOOL	Decimal	
CV3WindupHIn	BOOL	Decimal	
CV1WindupLIn	BOOL	Decimal	
CV2WindupLIn	BOOL	Decimal	
CV3WindupLIn	BOOL	Decimal	
GainEUSpan	BOOL	Decimal	
CV1ProcessGainSign	BOOL	Decimal	
CV2ProcessGainSign	BOOL	Decimal	
CV3ProcessGainSign	BOOL	Decimal	
ProcessType	DINT	Decimal	
CV1ModelGain	REAL	Float	
CV2ModelGain	REAL	Float	
CV3ModelGain	REAL	Float	
CV1ModelTC	REAL	Float	
CV2ModelTC	REAL	Float	
CV3ModelTC	REAL	Float	
CV1ModelDT	REAL	Float	

Name	Data Type	Style	Description
CV2ModelDT	REAL	Float	
CV3ModelDT	REAL	Float	
CV1RespTC	REAL	Float	
CV2RespTC	REAL	Float	
CV3RespTC	REAL	Float	
Act1stCV	DINT	Decimal	
Act2ndCV	DINT	Decimal	
Act3rdCV	DINT	Decimal	
Target1stCV	DINT	Decimal	
Target2ndCV	DINT	Decimal	
Target3rdCV	DINT	Decimal	
TargetRespTC	REAL	Float	
PVTracking	BOOL	Decimal	
CVTrackReq	BOOL	Decimal	
ManualAfterInit	BOOL	Decimal	
ProgProgReq	BOOL	Decimal	
ProgOperReq	BOOL	Decimal	
ProgCV1AutoReq	BOOL	Decimal	
ProgCV2AutoReq	BOOL	Decimal	
ProgCV3AutoReq	BOOL	Decimal	
ProgCV1ManualReq	BOOL	Decimal	
ProgCV2ManualReq	BOOL	Decimal	
ProgCV3ManualReq	BOOL	Decimal	
ProgCV1OverrideReq	BOOL	Decimal	
ProgCV2OverrideReq	BOOL	Decimal	
ProgCV3OverrideReq	BOOL	Decimal	
ProgCV1HandReq	BOOL	Decimal	
ProgCV2HandReq	BOOL	Decimal	
ProgCV3HandReq	BOOL	Decimal	
OperProgReq	BOOL	Decimal	
OperOperReq	BOOL	Decimal	
OperCV1AutoReq	BOOL	Decimal	
OperCV2AutoReq	BOOL	Decimal	
OperCV3AutoReq	BOOL	Decimal	
OperCV1ManualReq	BOOL	Decimal	
OperCV2ManualReq	BOOL	Decimal	
OperCV3ManualReq	BOOL	Decimal	
ProgValueReset	BOOL	Decimal	

Name	Data Type	Style	Description
TimingMode	DINT	Decimal	
OversampleDT	REAL	Float	
RTSTime	DINT	Decimal	
RTSTimeStamp	DINT	Decimal	
PVTuneLimit	REAL	Float	
AtuneTimeLimit	REAL	Float	
NoiseLevel	DINT	Decimal	
CV1StepSize	REAL	Float	
CV2StepSize	REAL	Float	
CV3StepSize	REAL	Float	
CV1ResponseSpeed	DINT	Decimal	
CV2ResponseSpeed	DINT	Decimal	
CV3ResponseSpeed	DINT	Decimal	
CV1ModelInit	BOOL	Decimal	
CV2ModelInit	BOOL	Decimal	
CV3ModelInit	BOOL	Decimal	
Factor	REAL	Float	
AtuneCV1Start	BOOL	Decimal	
AtuneCV2Start	BOOL	Decimal	
AtuneCV3Start	BOOL	Decimal	
AtuneCV1UseModel	BOOL	Decimal	
AtuneCV2UseModel	BOOL	Decimal	
AtuneCV3UseModel	BOOL	Decimal	
AtuneCV1Abort	BOOL	Decimal	
AtuneCV2Abort	BOOL	Decimal	
AtuneCV3Abort	BOOL	Decimal	
EnableOut	BOOL	Decimal	
CV1EU	REAL	Float	
CV2EU	REAL	Float	
CV3EU	REAL	Float	
CV1	REAL	Float	
CV2	REAL	Float	
CV3	REAL	Float	
DeltaCV1	REAL	Float	
DeltaCV2	REAL	Float	
DeltaCV3	REAL	Float	
CV1Initializing	BOOL	Decimal	
CV2Initializing	BOOL	Decimal	

Name	Data Type	Style	Description
CV3Initializing	BOOL	Decimal	
CV1HAlarm	BOOL	Decimal	
CV2HAlarm	BOOL	Decimal	
CV3HAlarm	BOOL	Decimal	
CV1LAlarm	BOOL	Decimal	
CV2LAlarm	BOOL	Decimal	
CV3LAlarm	BOOL	Decimal	
CV1ROCPosAlarm	BOOL	Decimal	
CV2ROCPosAlarm	BOOL	Decimal	
CV3ROCPosAlarm	BOOL	Decimal	
CV1ROCNegAlarm	BOOL	Decimal	
CV2ROCNegAlarm	BOOL	Decimal	
CV3ROCNegAlarm	BOOL	Decimal	
SP	REAL	Float	
SPPercent	REAL	Float	
SPHAlarm	BOOL	Decimal	
SPLAlarm	BOOL	Decimal	
PVPercent	REAL	Float	
E	REAL	Float	
EPercent	REAL	Float	
CV1WindupHOut	BOOL	Decimal	
CV2WindupHOut	BOOL	Decimal	
CV3WindupHOut	BOOL	Decimal	
CV1WindupLOut	BOOL	Decimal	
CV2WindupLOut	BOOL	Decimal	
CV3WindupLOut	BOOL	Decimal	
ProgOper	BOOL	Decimal	
CV1Auto	BOOL	Decimal	
CV2Auto	BOOL	Decimal	
CV3Auto	BOOL	Decimal	
CV1Manual	BOOL	Decimal	
CV2Manual	BOOL	Decimal	
CV3Manual	BOOL	Decimal	
CV1Override	BOOL	Decimal	
CV2Override	BOOL	Decimal	
CV3Override	BOOL	Decimal	
CV1Hand	BOOL	Decimal	
CV2Hand	BOOL	Decimal	

Name	Data Type	Style	Description
CV3Hand	BOOL	Decimal	
DeltaT	REAL	Float	
CV1StepSizeUsed	REAL	Float	
CV2StepSizeUsed	REAL	Float	
CV3StepSizeUsed	REAL	Float	
CV1GainTuned	REAL	Float	
CV2GainTuned	REAL	Float	
CV3GainTuned	REAL	Float	
CV1TCTuned	REAL	Float	
CV2TCTuned	REAL	Float	
CV3TCTuned	REAL	Float	
CV1DTTuned	REAL	Float	
CV2DTTuned	REAL	Float	
CV3DTTuned	REAL	Float	
CV1RespTCTunedS	REAL	Float	
CV2RespTCTunedS	REAL	Float	
CV3RespTCTunedS	REAL	Float	
CV1RespTCTunedM	REAL	Float	
CV2RespTCTunedM	REAL	Float	
CV3RespTCTunedM	REAL	Float	
CV1RespTCTunedF	REAL	Float	
CV2RespTCTunedF	REAL	Float	
CV3RespTCTunedF	REAL	Float	
AtuneCV1On	BOOL	Decimal	
AtuneCV2On	BOOL	Decimal	
AtuneCV3On	BOOL	Decimal	
AtuneCV1Done	BOOL	Decimal	
AtuneCV2Done	BOOL	Decimal	
AtuneCV3Done	BOOL	Decimal	
AtuneCV1Aborted	BOOL	Decimal	
AtuneCV2Aborted	BOOL	Decimal	
AtuneCV3Aborted	BOOL	Decimal	
AtuneCV1Status	DINT	Hex	
AtuneCV2Status	DINT	Hex	
AtuneCV3Status	DINT	Hex	
AtuneCV1Fault	BOOL	Decimal	
AtuneCV1PVOutOfLimit	BOOL	Decimal	
AtuneCV1ModeInv	BOOL	Decimal	

Name	Data Type	Style	Description
AtuneCV1WindupFault	BOOL	Decimal	
AtuneCV1StepSize0	BOOL	Decimal	
AtuneCV1LimitsFault	BOOL	Decimal	
AtuneCV1InitFault	BOOL	Decimal	
AtuneCV1EUSpanChanged	BOOL	Decimal	
AtuneCV1Changed	BOOL	Decimal	
AtuneCV1Timeout	BOOL	Decimal	
AtuneCV1PVNotSettled	BOOL	Decimal	
AtuneCV2Fault	BOOL	Decimal	
AtuneCV2PVOutOfLimit	BOOL	Decimal	
AtuneCV2ModeInv	BOOL	Decimal	
AtuneCV2WindupFault	BOOL	Decimal	
AtuneCV2StepSize0	BOOL	Decimal	
AtuneCV2LimitsFault	BOOL	Decimal	
AtuneCV2InitFault	BOOL	Decimal	
AtuneCV2EUSpanChanged	BOOL	Decimal	
AtuneCV2Changed	BOOL	Decimal	
AtuneCV2Timeout	BOOL	Decimal	
AtuneCV2PVNotSettled	BOOL	Decimal	
AtuneCV3Fault	BOOL	Decimal	
AtuneCV3PVOutOfLimit	BOOL	Decimal	
AtuneCV3ModeInv	BOOL	Decimal	
AtuneCV3WindupFault	BOOL	Decimal	
AtuneCV3StepSize0	BOOL	Decimal	
AtuneCV3LimitsFault	BOOL	Decimal	
AtuneCV3InitFault	BOOL	Decimal	
AtuneCV3EUSpanChanged	BOOL	Decimal	
AtuneCV3Changed	BOOL	Decimal	
AtuneCV3Timeout	BOOL	Decimal	
AtuneCV3PVNotSettled	BOOL	Decimal	
Status1	DINT	Hex	
Status2	DINT	Hex	
Status3CV1	DINT	Hex	
Status3CV2	DINT	Hex	
Status3CV3	DINT	Hex	
InstructFault	BOOL	Decimal	
PVFaulted	BOOL	Decimal	
PVSpanInv	BOOL	Decimal	

Name	Data Type	Style	Description
SPProgInv	BOOL	Decimal	
SPOperInv	BOOL	Decimal	
SPLimitsInv	BOOL	Decimal	
SampleTimeTooSmall	BOOL	Decimal	
FactorInv	BOOL	Decimal	
TimingModeInv	BOOL	Decimal	
RTSMissed	BOOL	Decimal	
RTSTimeInv	BOOL	Decimal	
RTSTimeStampInv	BOOL	Decimal	
DeltaTInv	BOOL	Decimal	
CV1Faulted	BOOL	Decimal	
CV1HandFBFaulted	BOOL	Decimal	
CV1ProgInv	BOOL	Decimal	
CV1OperInv	BOOL	Decimal	
CV1OverrideValueInv	BOOL	Decimal	
CV1TrackValueInv	BOOL	Decimal	
CV1EUSpanInv	BOOL	Decimal	
CV1LimitsInv	BOOL	Decimal	
CV1ROCLimitInv	BOOL	Decimal	
CV1HandFBInv	BOOL	Decimal	
CV1ModelGainInv	BOOL	Decimal	
CV1ModelTCInv	BOOL	Decimal	
CV1ModelDTInv	BOOL	Decimal	
CV1RespTCInv	BOOL	Decimal	
CV1TargetInv	BOOL	Decimal	
CV2Faulted	BOOL	Decimal	
CV2HandFBFaulted	BOOL	Decimal	
CV2ProgInv	BOOL	Decimal	
CV2OperInv	BOOL	Decimal	
CV2OverrideValueInv	BOOL	Decimal	
CV2TrackValueInv	BOOL	Decimal	
CV2EUSpanInv	BOOL	Decimal	
CV2LimitsInv	BOOL	Decimal	
CV2ROCLimitInv	BOOL	Decimal	
CV2HandFBInv	BOOL	Decimal	
CV2ModelGainInv	BOOL	Decimal	
CV2ModelTCInv	BOOL	Decimal	
CV2ModelDTInv	BOOL	Decimal	

Name	Data Type	Style	Description
CV2RespTCInv	BOOL	Decimal	
CV2TargetInv	BOOL	Decimal	
CV3Faulted	BOOL	Decimal	
CV3HandFBFaulted	BOOL	Decimal	
CV3ProgInv	BOOL	Decimal	
CV3OperInv	BOOL	Decimal	
CV3OverrideValueInv	BOOL	Decimal	
CV3TrackValueInv	BOOL	Decimal	
CV3EUSpanInv	BOOL	Decimal	
CV3LimitsInv	BOOL	Decimal	
CV3ROCLimitInv	BOOL	Decimal	
CV3HandFBInv	BOOL	Decimal	
CV3ModelGainInv	BOOL	Decimal	
CV3ModelTCInv	BOOL	Decimal	
CV3ModelDTInv	BOOL	Decimal	
CV3RespTCInv	BOOL	Decimal	
CV3TargetInv	BOOL	Decimal	

Data type Name: CONFIGURABLE_ROUT

Description:

Size: 52 byte(s)

Name	Data Type	Style	Description
EnableIn	BOOL	Decimal	
Actuate	BOOL	Decimal	
FeedbackType	BOOL	Decimal	
Feedback1	BOOL	Decimal	
Feedback2	BOOL	Decimal	
InputStatus	BOOL	Decimal	
OutputStatus	BOOL	Decimal	
Reset	BOOL	Decimal	
FeedbackReactionTime	DINT	Decimal	
EnableOut	BOOL	Decimal	
O1	BOOL	Decimal	
O2	BOOL	Decimal	
FP	BOOL	Decimal	
FaultCode	DINT	Decimal	
DiagnosticCode	DINT	Decimal	

Data type Name: CONNECTION_STATUS

Description:

Size: 4 byte(s)

Name	Data Type	Style	Description
RunMode	BOOL	Decimal	
ConnectionFaulted	BOOL	Decimal	

Data type Name: CONTROL

Description:

Size: 12 byte(s)

Name	Data Type	Style	Description
LEN	DINT	Decimal	
POS	DINT	Decimal	
EN	BOOL	Decimal	
EU	BOOL	Decimal	
DN	BOOL	Decimal	
EM	BOOL	Decimal	
ER	BOOL	Decimal	
UL	BOOL	Decimal	
IN	BOOL	Decimal	
FD	BOOL	Decimal	

Data type Name: COORDINATE_SYSTEM

Description:

Size: 84 byte(s)

Name	Data Type	Style	Description
CoordinateSystemStatus	DINT	Hex	
ShutdownStatus	BOOL	Decimal	
ReadyStatus	BOOL	Decimal	
MotionStatus	BOOL	Decimal	
AxisInhibitStatus	BOOL	Decimal	
CoordinateMotionStatus	DINT	Hex	
AccelStatus	BOOL	Decimal	
DecelStatus	BOOL	Decimal	
ActualPosToleranceStatus	BOOL	Decimal	
CommandPosToleranceStatus	BOOL	Decimal	
StoppingStatus	BOOL	Decimal	
MoveStatus	BOOL	Decimal	
MoveTransitionStatus	BOOL	Decimal	
MovePendingStatus	BOOL	Decimal	
MovePendingQueueFullStatus	BOOL	Decimal	
TransformSourceStatus	BOOL	Decimal	
TransformTargetStatus	BOOL	Decimal	
AxisFault	DINT	Hex	
PhysicalAxisFault	BOOL	Decimal	
ModuleFault	BOOL	Decimal	
ConfigFault	BOOL	Decimal	
PhysicalAxesFaulted	DINT	Decimal	
ModulesFaulted	DINT	Decimal	
AxesConfigurationFaulted	DINT	Decimal	
AxesShutdownStatus	DINT	Decimal	
AxesServoOnStatus	DINT	Decimal	
AxesInhibitedStatus	DINT	Decimal	
ActualPosition	REAL[8]	Float	

Data type Name: COUNTER

Description:

Size: 12 byte(s)

Name	Data Type	Style	Description
PRE	DINT	Decimal	
ACC	DINT	Decimal	
CU	BOOL	Decimal	
CD	BOOL	Decimal	
DN	BOOL	Decimal	
OV	BOOL	Decimal	
UN	BOOL	Decimal	

Data type Name: DCI_MONITOR

Description:

Size: 72 byte(s)

Name	Data Type	Style	Description
EnableIn	BOOL	Decimal	
ChannelA	BOOL	Decimal	
ChannelB	BOOL	Decimal	
InputStatus	BOOL	Decimal	
Reset	BOOL	Decimal	
SafetyFunction	DINT	Decimal	
InputType	DINT	Decimal	
DiscrepancyTime	DINT	Decimal	
EnableOut	BOOL	Decimal	
O1	BOOL	Decimal	
FP	BOOL	Decimal	
IS	BOOL	Decimal	
FaultCode	DINT	Decimal	
DiagnosticCode	DINT	Decimal	

Data type Name: DCI_START

Description:

Size: 80 byte(s)

Name	Data Type	Style	Description
EnableIn	BOOL	Decimal	
ChannelA	BOOL	Decimal	
ChannelB	BOOL	Decimal	
InputStatus	BOOL	Decimal	
Reset	BOOL	Decimal	
Enable	BOOL	Decimal	
SafetyFunction	DINT	Decimal	
InputType	DINT	Decimal	
DiscrepancyTime	DINT	Decimal	
EnableOut	BOOL	Decimal	
O1	BOOL	Decimal	
FP	BOOL	Decimal	
FaultCode	DINT	Decimal	
DiagnosticCode	DINT	Decimal	

Data type Name: DCI_STOP

Description:

Size: 80 byte(s)

Name	Data Type	Style	Description
EnableIn	BOOL	Decimal	
ChannelA	BOOL	Decimal	
ChannelB	BOOL	Decimal	
InputStatus	BOOL	Decimal	
Reset	BOOL	Decimal	
RestartType	BOOL	Decimal	
ColdStartType	BOOL	Decimal	
SafetyFunction	DINT	Decimal	
InputType	DINT	Decimal	
DiscrepancyTime	DINT	Decimal	
EnableOut	BOOL	Decimal	
O1	BOOL	Decimal	
FP	BOOL	Decimal	
FaultCode	DINT	Decimal	
DiagnosticCode	DINT	Decimal	

Data type Name: DCI_STOP_TEST

Description:

Size: 92 byte(s)

Name	Data Type	Style	Description
EnableIn	BOOL	Decimal	
ChannelA	BOOL	Decimal	
ChannelB	BOOL	Decimal	
InputStatus	BOOL	Decimal	
Reset	BOOL	Decimal	
RestartType	BOOL	Decimal	
ColdStartType	BOOL	Decimal	
TestRequest	BOOL	Decimal	
SafetyFunction	DINT	Decimal	
InputType	DINT	Decimal	
DiscrepancyTime	DINT	Decimal	
EnableOut	BOOL	Decimal	
O1	BOOL	Decimal	
FP	BOOL	Decimal	
TC	BOOL	Decimal	
FaultCode	DINT	Decimal	
DiagnosticCode	DINT	Decimal	

Data type Name: DCI_STOP_TEST_LOCK

Description:

Size: 92 byte(s)

Name	Data Type	Style	Description
EnableIn	BOOL	Decimal	
ChannelA	BOOL	Decimal	
ChannelB	BOOL	Decimal	
InputStatus	BOOL	Decimal	
Reset	BOOL	Decimal	
RestartType	BOOL	Decimal	
ColdStartType	BOOL	Decimal	
TestRequest	BOOL	Decimal	
UnlockRequest	BOOL	Decimal	
LockFeedback	BOOL	Decimal	
HazardStopped	BOOL	Decimal	
SafetyFunction	DINT	Decimal	
InputType	DINT	Decimal	
DiscrepancyTime	DINT	Decimal	
EnableOut	BOOL	Decimal	
O1	BOOL	Decimal	
FP	BOOL	Decimal	
TC	BOOL	Decimal	
ULC	BOOL	Decimal	
FaultCode	DINT	Decimal	
DiagnosticCode	DINT	Decimal	

Data type Name: DCI_STOP_TEST_MUTE

Description:

Size: 100 byte(s)

Name	Data Type	Style	Description
EnableIn	BOOL	Decimal	
ChannelA	BOOL	Decimal	
ChannelB	BOOL	Decimal	
InputStatus	BOOL	Decimal	
Reset	BOOL	Decimal	
RestartType	BOOL	Decimal	
ColdStartType	BOOL	Decimal	
TestRequest	BOOL	Decimal	
Mute	BOOL	Decimal	
MutingLampStatus	BOOL	Decimal	
SafetyFunction	DINT	Decimal	
InputType	DINT	Decimal	
DiscrepancyTime	DINT	Decimal	
TestType	DINT	Decimal	
TestTime	DINT	Decimal	
EnableOut	BOOL	Decimal	
O1	BOOL	Decimal	
FP	BOOL	Decimal	
TC	BOOL	Decimal	
ML	BOOL	Decimal	
SS	BOOL	Decimal	
FaultCode	DINT	Decimal	
DiagnosticCode	DINT	Decimal	

Data type Name: DEADTIME

Description:

Size: 112 byte(s)

Name	Data Type	Style	Description
EnableIn	BOOL	Decimal	
In	REAL	Float	
InFault	BOOL	Decimal	
Deadtime	REAL	Float	
Gain	REAL	Float	
Bias	REAL	Float	
TimingMode	DINT	Decimal	
OversampleDT	REAL	Float	
RTSTime	DINT	Decimal	
RTSTimeStamp	DINT	Decimal	
EnableOut	BOOL	Decimal	
Out	REAL	Float	
DeltaT	REAL	Float	
Status	DINT	Hex	
InstructFault	BOOL	Decimal	
InFaulted	BOOL	Decimal	
DeadtimeInv	BOOL	Decimal	
TimingModeInv	BOOL	Decimal	
RTSMissed	BOOL	Decimal	
RTSTimeInv	BOOL	Decimal	
RTSTimeStampInv	BOOL	Decimal	
DeltaTInv	BOOL	Decimal	

Data type Name: DERIVATIVE

Description:

Size: 88 byte(s)

Name	Data Type	Style	Description
EnableIn	BOOL	Decimal	
In	REAL	Float	
Gain	REAL	Float	
ByPass	BOOL	Decimal	
TimingMode	DINT	Decimal	
OversampleDT	REAL	Float	
RTSTime	DINT	Decimal	
RTSTimeStamp	DINT	Decimal	
EnableOut	BOOL	Decimal	
Out	REAL	Float	
DeltaT	REAL	Float	
Status	DINT	Hex	
InstructFault	BOOL	Decimal	
TimingModeInv	BOOL	Decimal	
RTSMissed	BOOL	Decimal	
RTSTimeInv	BOOL	Decimal	
RTSTimeStampInv	BOOL	Decimal	
DeltaTInv	BOOL	Decimal	

Data type Name: DISCRETE_2STATE

Description:

Size: 40 byte(s)

Name	Data Type	Style	Description
EnableIn	BOOL	Decimal	
ProgCommand	BOOL	Decimal	
Oper0Req	BOOL	Decimal	
Oper1Req	BOOL	Decimal	
State0Perm	BOOL	Decimal	
State1Perm	BOOL	Decimal	
FB0	BOOL	Decimal	
FB1	BOOL	Decimal	
HandFB	BOOL	Decimal	
FaultTime	REAL	Float	
FaultAlarmLatch	BOOL	Decimal	
FaultAlmUnlatch	BOOL	Decimal	
OverrideOnInit	BOOL	Decimal	
OverrideOnFault	BOOL	Decimal	
OutReverse	BOOL	Decimal	
OverrideState	BOOL	Decimal	
FB0State0	BOOL	Decimal	
FB0State1	BOOL	Decimal	
FB1State0	BOOL	Decimal	
FB1State1	BOOL	Decimal	
ProgProgReq	BOOL	Decimal	
ProgOperReq	BOOL	Decimal	
ProgOverrideReq	BOOL	Decimal	
ProgHandReq	BOOL	Decimal	
OperProgReq	BOOL	Decimal	
OperOperReq	BOOL	Decimal	
ProgValueReset	BOOL	Decimal	
EnableOut	BOOL	Decimal	
Out	BOOL	Decimal	
Device0State	BOOL	Decimal	
Device1State	BOOL	Decimal	
CommandStatus	BOOL	Decimal	
FaultAlarm	BOOL	Decimal	
ModeAlarm	BOOL	Decimal	
ProgOper	BOOL	Decimal	
Override	BOOL	Decimal	
Hand	BOOL	Decimal	
Status	DINT	Hex	

Name	Data Type	Style	Description
InstructFault	BOOL	Decimal	
FaultTimeInv	BOOL	Decimal	
OperReqInv	BOOL	Decimal	

Data type Name: DISCRETE_3STATE

Description:

Size: 48 byte(s)

Name	Data Type	Style	Description
EnableIn	BOOL	Decimal	
Prog0Command	BOOL	Decimal	
Prog1Command	BOOL	Decimal	
Prog2Command	BOOL	Decimal	
Oper0Req	BOOL	Decimal	
Oper1Req	BOOL	Decimal	
Oper2Req	BOOL	Decimal	
State0Perm	BOOL	Decimal	
State1Perm	BOOL	Decimal	
State2Perm	BOOL	Decimal	
FB0	BOOL	Decimal	
FB1	BOOL	Decimal	
FB2	BOOL	Decimal	
FB3	BOOL	Decimal	
HandFB0	BOOL	Decimal	
HandFB1	BOOL	Decimal	
HandFB2	BOOL	Decimal	
FaultTime	REAL	Float	
FaultAlarmLatch	BOOL	Decimal	
FaultAlmUnlatch	BOOL	Decimal	
OverrideOnInit	BOOL	Decimal	
OverrideOnFault	BOOL	Decimal	
Out0State0	BOOL	Decimal	
Out0State1	BOOL	Decimal	
Out0State2	BOOL	Decimal	
Out1State0	BOOL	Decimal	
Out1State1	BOOL	Decimal	
Out1State2	BOOL	Decimal	
Out2State0	BOOL	Decimal	
Out2State1	BOOL	Decimal	
Out2State2	BOOL	Decimal	
OverrideState	DINT	Decimal	
FB0State0	BOOL	Decimal	
FB0State1	BOOL	Decimal	
FB0State2	BOOL	Decimal	
FB1State0	BOOL	Decimal	
FB1State1	BOOL	Decimal	
FB1State2	BOOL	Decimal	

Name	Data Type	Style	Description
FB2State0	BOOL	Decimal	
FB2State1	BOOL	Decimal	
FB2State2	BOOL	Decimal	
FB3State0	BOOL	Decimal	
FB3State1	BOOL	Decimal	
FB3State2	BOOL	Decimal	
ProgProgReq	BOOL	Decimal	
ProgOperReq	BOOL	Decimal	
ProgOverrideReq	BOOL	Decimal	
ProgHandReq	BOOL	Decimal	
OperProgReq	BOOL	Decimal	
OperOperReq	BOOL	Decimal	
ProgValueReset	BOOL	Decimal	
EnableOut	BOOL	Decimal	
Out0	BOOL	Decimal	
Out1	BOOL	Decimal	
Out2	BOOL	Decimal	
Device0State	BOOL	Decimal	
Device1State	BOOL	Decimal	
Device2State	BOOL	Decimal	
Command0Status	BOOL	Decimal	
Command1Status	BOOL	Decimal	
Command2Status	BOOL	Decimal	
FaultAlarm	BOOL	Decimal	
ModeAlarm	BOOL	Decimal	
ProgOper	BOOL	Decimal	
Override	BOOL	Decimal	
Hand	BOOL	Decimal	
Status	DINT	Hex	
InstructFault	BOOL	Decimal	
FaultTimeInv	BOOL	Decimal	
OverrideStateInv	BOOL	Decimal	
ProgCommandInv	BOOL	Decimal	
OperReqInv	BOOL	Decimal	
HandCommandInv	BOOL	Decimal	

Data type Name: DIVERSE_INPUT

Description:

Size: 52 byte(s)

Name	Data Type	Style	Description
EnableIn	BOOL	Decimal	
ResetType	BOOL	Decimal	
ChannelA	BOOL	Decimal	
ChannelB	BOOL	Decimal	
CircuitReset	BOOL	Decimal	
FaultReset	BOOL	Decimal	
EnableOut	BOOL	Decimal	
O1	BOOL	Decimal	
CI	BOOL	Decimal	
CRHO	BOOL	Decimal	
II	BOOL	Decimal	
FP	BOOL	Decimal	

Data type Name: DOMINANT_RESET

Description:

Size: 12 byte(s)

Name	Data Type	Style	Description
EnableIn	BOOL	Decimal	
Set	BOOL	Decimal	
Reset	BOOL	Decimal	
EnableOut	BOOL	Decimal	
Out	BOOL	Decimal	
OutNot	BOOL	Decimal	

Data type Name: DOMINANT_SET

Description:

Size: 12 byte(s)

Name	Data Type	Style	Description
EnableIn	BOOL	Decimal	
Set	BOOL	Decimal	
Reset	BOOL	Decimal	
EnableOut	BOOL	Decimal	
Out	BOOL	Decimal	
OutNot	BOOL	Decimal	

Data type Name: EIGHT_POS_MODE_SELECTOR

Description:

Size: 44 byte(s)

Name	Data Type	Style	Description
EnableIn	BOOL	Decimal	
Input1	BOOL	Decimal	
Input2	BOOL	Decimal	
Input3	BOOL	Decimal	
Input4	BOOL	Decimal	
Input5	BOOL	Decimal	
Input6	BOOL	Decimal	
Input7	BOOL	Decimal	
Input8	BOOL	Decimal	
InputStatus	BOOL	Decimal	
Lock	BOOL	Decimal	
Reset	BOOL	Decimal	
EnableOut	BOOL	Decimal	
O1	BOOL	Decimal	
O2	BOOL	Decimal	
O3	BOOL	Decimal	
O4	BOOL	Decimal	
O5	BOOL	Decimal	
O6	BOOL	Decimal	
O7	BOOL	Decimal	
O8	BOOL	Decimal	
FP	BOOL	Decimal	
FaultCode	DINT	Decimal	
DiagnosticCode	DINT	Decimal	

Data type Name: EMERGENCY_STOP

Description:

Size: 52 byte(s)

Name	Data Type	Style	Description
EnableIn	BOOL	Decimal	
ResetType	BOOL	Decimal	
ChannelA	BOOL	Decimal	
ChannelB	BOOL	Decimal	
CircuitReset	BOOL	Decimal	
FaultReset	BOOL	Decimal	
EnableOut	BOOL	Decimal	
O1	BOOL	Decimal	
CI	BOOL	Decimal	
CRHO	BOOL	Decimal	
II	BOOL	Decimal	
FP	BOOL	Decimal	

Data type Name: ENABLE_PENDANT

Description:

Size: 52 byte(s)

Name	Data Type	Style	Description
EnableIn	BOOL	Decimal	
ResetType	BOOL	Decimal	
ChannelA	BOOL	Decimal	
ChannelB	BOOL	Decimal	
CircuitReset	BOOL	Decimal	
FaultReset	BOOL	Decimal	
EnableOut	BOOL	Decimal	
O1	BOOL	Decimal	
CI	BOOL	Decimal	
CRHO	BOOL	Decimal	
II	BOOL	Decimal	
FP	BOOL	Decimal	

Data type Name: EXT_ROUTINE_CONTROL

Description:

Size: 136 byte(s)

Name	Data Type	Style	Description
ErrorCode	SINT	Decimal	
NumParams	SINT	Decimal	
ParameterDefs	EXT_ROUTINE_PARAMETERS[10]		
ElementSize	DINT	Decimal	
ElementCount	DINT	Decimal	
ParamType	DINT	Decimal	
ReturnParamDef	EXT_ROUTINE_PARAMETERS		
ElementSize	DINT	Decimal	
ElementCount	DINT	Decimal	
ParamType	DINT	Decimal	
EN	BOOL	Decimal	
ReturnsValue	BOOL	Decimal	
DN	BOOL	Decimal	
ER	BOOL	Decimal	
FirstScan	BOOL	Decimal	
EnableOut	BOOL	Decimal	
EnableIn	BOOL	Decimal	
User1	BOOL	Decimal	
User0	BOOL	Decimal	
ScanType1	BOOL	Decimal	
ScanType0	BOOL	Decimal	

Data type Name: EXT_ROUTINE_PARAMETERS

Description:

Size: 12 byte(s)

Name	Data Type	Style	Description
ElementSize	DINT	Decimal	
ElementCount	DINT	Decimal	
ParamType	DINT	Decimal	

Data type Name: FBD_BIT_FIELD_DISTRIBUTE

Description:

Size: 28 byte(s)

Name	Data Type	Style	Description
EnableIn	BOOL	Decimal	
Source	DINT	Decimal	
SourceBit	DINT	Decimal	
Length	DINT	Decimal	
DestBit	DINT	Decimal	
Target	DINT	Decimal	
EnableOut	BOOL	Decimal	
Dest	DINT	Decimal	

Data type Name: FBD_BOOLEAN_AND

Description:

Size: 12 byte(s)

Name	Data Type	Style	Description
EnableIn	BOOL	Decimal	
In1	BOOL	Decimal	
In2	BOOL	Decimal	
In3	BOOL	Decimal	
In4	BOOL	Decimal	
In5	BOOL	Decimal	
In6	BOOL	Decimal	
In7	BOOL	Decimal	
In8	BOOL	Decimal	
EnableOut	BOOL	Decimal	
Out	BOOL	Decimal	

Data type Name: FBD_BOOLEAN_NOT

Description:

Size: 12 byte(s)

Name	Data Type	Style	Description
EnableIn	BOOL	Decimal	
In	BOOL	Decimal	
EnableOut	BOOL	Decimal	
Out	BOOL	Decimal	

Data type Name: FBD_BOOLEAN_OR

Description:

Size: 12 byte(s)

Name	Data Type	Style	Description
EnableIn	BOOL	Decimal	
In1	BOOL	Decimal	
In2	BOOL	Decimal	
In3	BOOL	Decimal	
In4	BOOL	Decimal	
In5	BOOL	Decimal	
In6	BOOL	Decimal	
In7	BOOL	Decimal	
In8	BOOL	Decimal	
EnableOut	BOOL	Decimal	
Out	BOOL	Decimal	

Data type Name: FBD_BOOLEAN_XOR

Description:

Size: 12 byte(s)

Name	Data Type	Style	Description
EnableIn	BOOL	Decimal	
In1	BOOL	Decimal	
In2	BOOL	Decimal	
EnableOut	BOOL	Decimal	
Out	BOOL	Decimal	

Data type Name: FBD_COMPARE

Description:

Size: 12 byte(s)

Name	Data Type	Style	Description
EnableIn	BOOL	Decimal	
SourceA	REAL	Float	
SourceB	REAL	Float	
EnableOut	BOOL	Decimal	
Dest	BOOL	Decimal	

Data type Name: FBD_CONVERT

Description:

Size: 12 byte(s)

Name	Data Type	Style	Description
EnableIn	BOOL	Decimal	
Source	DINT	Decimal	
EnableOut	BOOL	Decimal	
Dest	DINT	Decimal	

Data type Name: FBD_COUNTER

Description:

Size: 24 byte(s)

Name	Data Type	Style	Description
EnableIn	BOOL	Decimal	
CUEnable	BOOL	Decimal	
CDEnable	BOOL	Decimal	
PRE	DINT	Decimal	
Reset	BOOL	Decimal	
EnableOut	BOOL	Decimal	
ACC	DINT	Decimal	
CU	BOOL	Decimal	
CD	BOOL	Decimal	
DN	BOOL	Decimal	
OV	BOOL	Decimal	
UN	BOOL	Decimal	

Data type Name: FBD_LIMIT

Description:

Size: 16 byte(s)

Name	Data Type	Style	Description
EnableIn	BOOL	Decimal	
LowLimit	REAL	Float	
Test	REAL	Float	
HighLimit	REAL	Float	
EnableOut	BOOL	Decimal	
Dest	BOOL	Decimal	

Data type Name: FBD_LOGICAL

Description:

Size: 16 byte(s)

Name	Data Type	Style	Description
EnableIn	BOOL	Decimal	
SourceA	DINT	Decimal	
SourceB	DINT	Decimal	
EnableOut	BOOL	Decimal	
Dest	DINT	Decimal	

Data type Name: FBD_MASKED_MOVE

Description:

Size: 20 byte(s)

Name	Data Type	Style	Description
EnableIn	BOOL	Decimal	
Source	DINT	Decimal	
Mask	DINT	Decimal	
Target	DINT	Decimal	
EnableOut	BOOL	Decimal	
Dest	DINT	Decimal	

Data type Name: FBD_MASK_EQUAL

Description:

Size: 16 byte(s)

Name	Data Type	Style	Description
EnableIn	BOOL	Decimal	
Source	DINT	Decimal	
Mask	DINT	Decimal	
Compare	DINT	Decimal	
EnableOut	BOOL	Decimal	
Dest	BOOL	Decimal	

Data type Name: FBD_MATH

Description:

Size: 16 byte(s)

Name	Data Type	Style	Description
EnableIn	BOOL	Decimal	
SourceA	REAL	Float	
SourceB	REAL	Float	
EnableOut	BOOL	Decimal	
Dest	REAL	Float	

Data type Name: FBD_MATH_ADVANCED

Description:

Size: 12 byte(s)

Name	Data Type	Style	Description
EnableIn	BOOL	Decimal	
Source	REAL	Float	
EnableOut	BOOL	Decimal	
Dest	REAL	Float	

Data type Name: FBD_ONESHOT

Description:

Size: 12 byte(s)

Name	Data Type	Style	Description
EnableIn	BOOL	Decimal	
InputBit	BOOL	Decimal	
EnableOut	BOOL	Decimal	
OutputBit	BOOL	Decimal	

Data type Name: FBD_TIMER

Description:

Size: 48 byte(s)

Name	Data Type	Style	Description
EnableIn	BOOL	Decimal	
TimerEnable	BOOL	Decimal	
PRE	DINT	Decimal	
Reset	BOOL	Decimal	
EnableOut	BOOL	Decimal	
ACC	DINT	Decimal	
EN	BOOL	Decimal	
TT	BOOL	Decimal	
DN	BOOL	Decimal	
Status	DINT	Hex	
InstructFault	BOOL	Decimal	
PresetInv	BOOL	Decimal	

Data type Name: FBD_TRUNCATE

Description:

Size: 12 byte(s)

Name	Data Type	Style	Description
EnableIn	BOOL	Decimal	
Source	REAL	Float	
EnableOut	BOOL	Decimal	
Dest	DINT	Decimal	

Data type Name: FILTER_HIGH_PASS

Description:

Size: 156 byte(s)

Name	Data Type	Style	Description
EnableIn	BOOL	Decimal	
In	REAL	Float	
Initialize	BOOL	Decimal	
WLead	REAL	Float	
Order	DINT	Decimal	
TimingMode	DINT	Decimal	
OversampleDT	REAL	Float	
RTSTime	DINT	Decimal	
RTSTimeStamp	DINT	Decimal	
EnableOut	BOOL	Decimal	
Out	REAL	Float	
DeltaT	REAL	Float	
Status	DINT	Hex	
InstructFault	BOOL	Decimal	
WLeadInv	BOOL	Decimal	
OrderInv	BOOL	Decimal	
TimingModeInv	BOOL	Decimal	
RTSMissed	BOOL	Decimal	
RTSTimeInv	BOOL	Decimal	
RTSTimeStampInv	BOOL	Decimal	
DeltaTInv	BOOL	Decimal	

Data type Name: FILTER_LOW_PASS

Description:

Size: 156 byte(s)

Name	Data Type	Style	Description
EnableIn	BOOL	Decimal	
In	REAL	Float	
Initialize	BOOL	Decimal	
WLag	REAL	Float	
Order	DINT	Decimal	
TimingMode	DINT	Decimal	
OversampleDT	REAL	Float	
RTSTime	DINT	Decimal	
RTSTimeStamp	DINT	Decimal	
EnableOut	BOOL	Decimal	
Out	REAL	Float	
DeltaT	REAL	Float	
Status	DINT	Hex	
InstructFault	BOOL	Decimal	
WLagInv	BOOL	Decimal	
OrderInv	BOOL	Decimal	
TimingModeInv	BOOL	Decimal	
RTSMissed	BOOL	Decimal	
RTSTimeInv	BOOL	Decimal	
RTSTimeStampInv	BOOL	Decimal	
DeltaTInv	BOOL	Decimal	

Data type Name: FILTER_NOTCH

Description:

Size: 184 byte(s)

Name	Data Type	Style	Description
EnableIn	BOOL	Decimal	
In	REAL	Float	
Initialize	BOOL	Decimal	
WNotch	REAL	Float	
QFactor	REAL	Float	
Order	DINT	Decimal	
TimingMode	DINT	Decimal	
OversampleDT	REAL	Float	
RTSTime	DINT	Decimal	
RTSTimeStamp	DINT	Decimal	
EnableOut	BOOL	Decimal	
Out	REAL	Float	
DeltaT	REAL	Float	
Status	DINT	Hex	
InstructFault	BOOL	Decimal	
WNotchInv	BOOL	Decimal	
QFactorInv	BOOL	Decimal	
OrderInv	BOOL	Decimal	
TimingModeInv	BOOL	Decimal	
RTSMissed	BOOL	Decimal	
RTSTimeInv	BOOL	Decimal	
RTSTimeStampInv	BOOL	Decimal	
DeltaTInv	BOOL	Decimal	

Data type Name: FIVE_POS_MODE_SELECTOR

Description:

Size: 36 byte(s)

Name	Data Type	Style	Description
EnableIn	BOOL	Decimal	
Input1	BOOL	Decimal	
Input2	BOOL	Decimal	
Input3	BOOL	Decimal	
Input4	BOOL	Decimal	
Input5	BOOL	Decimal	
FaultReset	BOOL	Decimal	
EnableOut	BOOL	Decimal	
O1	BOOL	Decimal	
O2	BOOL	Decimal	
O3	BOOL	Decimal	
O4	BOOL	Decimal	
O5	BOOL	Decimal	
NM	BOOL	Decimal	
MMS	BOOL	Decimal	
FP	BOOL	Decimal	

Data type Name: FLIP_FLOP_D

Description:

Size: 12 byte(s)

Name	Data Type	Style	Description
EnableIn	BOOL	Decimal	
D	BOOL	Decimal	
Clear	BOOL	Decimal	
Clock	BOOL	Decimal	
EnableOut	BOOL	Decimal	
Q	BOOL	Decimal	
QNot	BOOL	Decimal	

Data type Name: FLIP_FLOP_JK

Description:

Size: 12 byte(s)

Name	Data Type	Style	Description
EnableIn	BOOL	Decimal	
Clear	BOOL	Decimal	
Clock	BOOL	Decimal	
EnableOut	BOOL	Decimal	
Q	BOOL	Decimal	
QNot	BOOL	Decimal	

Data type Name: FUNCTION_GENERATOR

Description:

Size: 52 byte(s)

Name	Data Type	Style	Description
EnableIn	BOOL	Decimal	
In	REAL	Float	
XY1Size	DINT	Decimal	
XY2Size	DINT	Decimal	
Select	BOOL	Decimal	
EnableOut	BOOL	Decimal	
Out	REAL	Float	
Status	DINT	Hex	
InstructFault	BOOL	Decimal	
XY1SizeInv	BOOL	Decimal	
XY2SizeInv	BOOL	Decimal	
XisOutofOrder	BOOL	Decimal	

Data type Name: HL_LIMIT

Description:

Size: 36 byte(s)

Name	Data Type	Style	Description
EnableIn	BOOL	Decimal	
In	REAL	Float	
HighLimit	REAL	Float	
LowLimit	REAL	Float	
SelectLimit	DINT	Decimal	
EnableOut	BOOL	Decimal	
Out	REAL	Float	
HighAlarm	BOOL	Decimal	
LowAlarm	BOOL	Decimal	
Status	DINT	Hex	
InstructFault	BOOL	Decimal	
LimitsInv	BOOL	Decimal	
SelectLimitInv	BOOL	Decimal	

Data type Name: IMC

Description:

Size: 4316 byte(s)

Name	Data Type	Style	Description
EnableIn	BOOL	Decimal	
PV	REAL	Float	
PVFault	BOOL	Decimal	
PVEUMax	REAL	Float	
PVEUMin	REAL	Float	
SPProg	REAL	Float	
SPOper	REAL	Float	
SPCascade	REAL	Float	
SPHLimit	REAL	Float	
SPLLimit	REAL	Float	
UseRatio	BOOL	Decimal	
RatioProg	REAL	Float	
RatioOper	REAL	Float	
RatioHLimit	REAL	Float	
RatioLLimit	REAL	Float	
CVFault	BOOL	Decimal	
CVInitReq	BOOL	Decimal	
CVInitValue	REAL	Float	
CVProg	REAL	Float	
CVOper	REAL	Float	
CVOverrideValue	REAL	Float	
CVTrackValue	REAL	Float	
CVManLimiting	BOOL	Decimal	
CVEUMax	REAL	Float	
CVEUMin	REAL	Float	
CVHLimit	REAL	Float	
CVLLimit	REAL	Float	
CVROCPosLimit	REAL	Float	
CVROCNegLimit	REAL	Float	
HandFB	REAL	Float	
HandFBFault	BOOL	Decimal	
WindupHIn	BOOL	Decimal	
WindupLIn	BOOL	Decimal	
GainEUSpan	BOOL	Decimal	
ProcessGainSign	BOOL	Decimal	
ProcessType	DINT	Decimal	
ModelGain	REAL	Float	
ModelTC	REAL	Float	

Name	Data Type	Style	Description
ModelDT	REAL	Float	
RespTC	REAL	Float	
PVTracking	BOOL	Decimal	
CVTrackReq	BOOL	Decimal	
AllowCasRat	BOOL	Decimal	
ManualAfterInit	BOOL	Decimal	
ProgProgReq	BOOL	Decimal	
ProgOperReq	BOOL	Decimal	
ProgCasRatReq	BOOL	Decimal	
ProgAutoReq	BOOL	Decimal	
ProgManualReq	BOOL	Decimal	
ProgOverrideReq	BOOL	Decimal	
ProgHandReq	BOOL	Decimal	
OperProgReq	BOOL	Decimal	
OperOperReq	BOOL	Decimal	
OperCasRatReq	BOOL	Decimal	
OperAutoReq	BOOL	Decimal	
OperManualReq	BOOL	Decimal	
ProgValueReset	BOOL	Decimal	
TimingMode	DINT	Decimal	
OversampleDT	REAL	Float	
RTSTime	DINT	Decimal	
RTSTimeStamp	DINT	Decimal	
PVTuneLimit	REAL	Float	
AtuneTimeLimit	REAL	Float	
NoiseLevel	DINT	Decimal	
CVStepSize	REAL	Float	
ResponseSpeed	DINT	Decimal	
ModelInit	BOOL	Decimal	
Factor	REAL	Float	
AtuneStart	BOOL	Decimal	
AtuneUseModel	BOOL	Decimal	
AtuneAbort	BOOL	Decimal	
EnableOut	BOOL	Decimal	
CVEU	REAL	Float	
CV	REAL	Float	
DeltaCV	REAL	Float	
CVInitializing	BOOL	Decimal	

Name	Data Type	Style	Description
CVHAlarm	BOOL	Decimal	
CVLAlarm	BOOL	Decimal	
CVROCPosAlarm	BOOL	Decimal	
CVROCNegAlarm	BOOL	Decimal	
SP	REAL	Float	
SPPercent	REAL	Float	
SPHAlarm	BOOL	Decimal	
SPLAlarm	BOOL	Decimal	
PVPercent	REAL	Float	
E	REAL	Float	
EPercent	REAL	Float	
InitPrimary	BOOL	Decimal	
WindupHOut	BOOL	Decimal	
WindupLOut	BOOL	Decimal	
Ratio	REAL	Float	
RatioHAlarm	BOOL	Decimal	
RatioLAlarm	BOOL	Decimal	
ProgOper	BOOL	Decimal	
CasRat	BOOL	Decimal	
Auto	BOOL	Decimal	
Manual	BOOL	Decimal	
Override	BOOL	Decimal	
Hand	BOOL	Decimal	
DeltaT	REAL	Float	
StepSizeUsed	REAL	Float	
GainTuned	REAL	Float	
TCTuned	REAL	Float	
DTTuned	REAL	Float	
RespTCTunedS	REAL	Float	
RespTCTunedM	REAL	Float	
RespTCTunedF	REAL	Float	
AtuneOn	BOOL	Decimal	
AtuneDone	BOOL	Decimal	
AtuneAborted	BOOL	Decimal	
AtuneStatus	DINT	Hex	
AtuneFault	BOOL	Decimal	
AtunePVOutOfLimit	BOOL	Decimal	
AtuneModeInv	BOOL	Decimal	

Name	Data Type	Style	Description
AtuneCVWindupFault	BOOL	Decimal	
AtuneStepSize0	BOOL	Decimal	
AtuneCVLimitsFault	BOOL	Decimal	
AtuneCVInitFault	BOOL	Decimal	
AtuneEUSpanChanged	BOOL	Decimal	
AtuneCVChanged	BOOL	Decimal	
AtuneTimeout	BOOL	Decimal	
AtunePVNotSettled	BOOL	Decimal	
Status1	DINT	Hex	
Status2	DINT	Hex	
InstructFault	BOOL	Decimal	
PVFaulted	BOOL	Decimal	
CVFaulted	BOOL	Decimal	
HandFBFaulted	BOOL	Decimal	
PVSpanInv	BOOL	Decimal	
SPProgInv	BOOL	Decimal	
SPOperInv	BOOL	Decimal	
SPCascadeInv	BOOL	Decimal	
SPLimitsInv	BOOL	Decimal	
RatioLimitsInv	BOOL	Decimal	
RatioProgInv	BOOL	Decimal	
RatioOperInv	BOOL	Decimal	
CVProgInv	BOOL	Decimal	
CVOperInv	BOOL	Decimal	
CVOverrideValueInv	BOOL	Decimal	
CVTrackValueInv	BOOL	Decimal	
CVEUSpanInv	BOOL	Decimal	
CVLimitsInv	BOOL	Decimal	
CVROCLimitInv	BOOL	Decimal	
HandFBInv	BOOL	Decimal	
SampleTimeTooSmall	BOOL	Decimal	
FactorInv	BOOL	Decimal	
ModelGainInv	BOOL	Decimal	
ModelTCInv	BOOL	Decimal	
ModelDTInv	BOOL	Decimal	
RespTCInv	BOOL	Decimal	
TimingModeInv	BOOL	Decimal	
RTSMissed	BOOL	Decimal	

Name	Data Type	Style	Description
RTSTimeInv	BOOL	Decimal	
RTSTimeStampInv	BOOL	Decimal	
DeltaTInv	BOOL	Decimal	

Data type Name: INTEGRATOR

Description:

Size: 88 byte(s)

Name	Data Type	Style	Description
EnableIn	BOOL	Decimal	
In	REAL	Float	
Initialize	BOOL	Decimal	
InitialValue	REAL	Float	
IGain	REAL	Float	
HighLimit	REAL	Float	
LowLimit	REAL	Float	
HoldHigh	BOOL	Decimal	
HoldLow	BOOL	Decimal	
TimingMode	DINT	Decimal	
OversampleDT	REAL	Float	
RTSTime	DINT	Decimal	
RTSTimeStamp	DINT	Decimal	
EnableOut	BOOL	Decimal	
Out	REAL	Float	
HighAlarm	BOOL	Decimal	
LowAlarm	BOOL	Decimal	
DeltaT	REAL	Float	
Status	DINT	Hex	
InstructFault	BOOL	Decimal	
IGainInv	BOOL	Decimal	
HighLowLimsInv	BOOL	Decimal	
TimingModeInv	BOOL	Decimal	
RTSMissed	BOOL	Decimal	
RTSTimeInv	BOOL	Decimal	
RTSTimeStampInv	BOOL	Decimal	
DeltaTInv	BOOL	Decimal	

Data type Name: LEAD_LAG

Description:

Size: 132 byte(s)

Name	Data Type	Style	Description
EnableIn	BOOL	Decimal	
In	REAL	Float	
Initialize	BOOL	Decimal	
Lead	REAL	Float	
Lag	REAL	Float	
Gain	REAL	Float	
Bias	REAL	Float	
TimingMode	DINT	Decimal	
OversampleDT	REAL	Float	
RTSTime	DINT	Decimal	
RTSTimeStamp	DINT	Decimal	
EnableOut	BOOL	Decimal	
Out	REAL	Float	
DeltaT	REAL	Float	
Status	DINT	Hex	
InstructFault	BOOL	Decimal	
LeadInv	BOOL	Decimal	
LagInv	BOOL	Decimal	
TimingModeInv	BOOL	Decimal	
RTSMissed	BOOL	Decimal	
RTSTimeInv	BOOL	Decimal	
RTSTimeStampInv	BOOL	Decimal	
DeltaTInv	BOOL	Decimal	

Data type Name: LEAD_LAG_SEC_ORDER

Description:

Size: 176 byte(s)

Name	Data Type	Style	Description
EnableIn	BOOL	Decimal	
In	REAL	Float	
Initialize	BOOL	Decimal	
WLead	REAL	Float	
WLag	REAL	Float	
ZetaLead	REAL	Float	
ZetaLag	REAL	Float	
Order	DINT	Decimal	
TimingMode	DINT	Decimal	
OversampleDT	REAL	Float	
RTSTime	DINT	Decimal	
RTSTimeStamp	DINT	Decimal	
EnableOut	BOOL	Decimal	
Out	REAL	Float	
DeltaT	REAL	Float	
Status	DINT	Hex	
InstructFault	BOOL	Decimal	
WLeadInv	BOOL	Decimal	
WLagInv	BOOL	Decimal	
ZetaLeadInv	BOOL	Decimal	
ZetaLagInv	BOOL	Decimal	
OrderInv	BOOL	Decimal	
WLagRatioInv	BOOL	Decimal	
TimingModeInv	BOOL	Decimal	
RTSMissed	BOOL	Decimal	
RTSTimeInv	BOOL	Decimal	
RTSTimeStampInv	BOOL	Decimal	
DeltaTInv	BOOL	Decimal	

Data type Name: LIGHT_CURTAIN

Description:

Size: 52 byte(s)

Name	Data Type	Style	Description
EnableIn	BOOL	Decimal	
ResetType	BOOL	Decimal	
ChannelA	BOOL	Decimal	
ChannelB	BOOL	Decimal	
MuteLightCurtain	BOOL	Decimal	
CircuitReset	BOOL	Decimal	
FaultReset	BOOL	Decimal	
InputFilterTime	DINT	Decimal	
EnableOut	BOOL	Decimal	
O1	BOOL	Decimal	
CI	BOOL	Decimal	
CRHO	BOOL	Decimal	
LCB	BOOL	Decimal	
LCM	BOOL	Decimal	
II	BOOL	Decimal	
FP	BOOL	Decimal	

Data type Name: MAIN_VALVE_CONTROL

Description:

Size: 52 byte(s)

Name	Data Type	Style	Description
EnableIn	BOOL	Decimal	
Actuate	BOOL	Decimal	
FeedbackType	BOOL	Decimal	
Feedback1	BOOL	Decimal	
Feedback2	BOOL	Decimal	
InputStatus	BOOL	Decimal	
OutputStatus	BOOL	Decimal	
Reset	BOOL	Decimal	
FeedbackReactionTime	DINT	Decimal	
EnableOut	BOOL	Decimal	
O1	BOOL	Decimal	
O2	BOOL	Decimal	
FP	BOOL	Decimal	
FaultCode	DINT	Decimal	
DiagnosticCode	DINT	Decimal	

Data type Name: MANUAL_VALVE_CONTROL

Description:

Size: 32 byte(s)

Name	Data Type	Style	Description
EnableIn	BOOL	Decimal	
Enable	BOOL	Decimal	
Keyswitch	BOOL	Decimal	
Bottom	BOOL	Decimal	
FlywheelStopped	BOOL	Decimal	
SafetyEnable	BOOL	Decimal	
Actuate	BOOL	Decimal	
InputStatus	BOOL	Decimal	
OutputStatus	BOOL	Decimal	
Reset	BOOL	Decimal	
EnableOut	BOOL	Decimal	
O1	BOOL	Decimal	
FP	BOOL	Decimal	
FaultCode	DINT	Decimal	
DiagnosticCode	DINT	Decimal	

Data type Name: MAXIMUM_CAPTURE

Description:

Size: 28 byte(s)

Name	Data Type	Style	Description
EnableIn	BOOL	Decimal	
In	REAL	Float	
Reset	BOOL	Decimal	
ResetValue	REAL	Float	
EnableOut	BOOL	Decimal	
Out	REAL	Float	

Data type Name: MESSAGE

Description:

Size: 240 byte(s)

Name	Data Type	Style	Description
Flags	INT	Hex	
EW	BOOL	Decimal	
ER	BOOL	Decimal	
DN	BOOL	Decimal	
ST	BOOL	Decimal	
EN	BOOL	Decimal	
TO	BOOL	Decimal	
EN_CC	BOOL	Decimal	
ERR	INT	Hex	
EXERR	DINT	Hex	
ERR_SRC	SINT	Decimal	
DN_LEN	INT	Decimal	
REQ_LEN	INT	Decimal	
DestinationLink	INT	Decimal	
DestinationNode	INT	Octal	
SourceLink	INT	Decimal	
Class	INT	Hex	
Attribute	INT	Hex	
Instance	DINT	Decimal	
LocalIndex	DINT	Decimal	
Channel	SINT	ASCII	
Rack	SINT	Octal	
Group	SINT	Decimal	
Slot	SINT	Decimal	
Path	STRING		
LEN	DINT	Decimal	
DATA	SINT[82]	ASCII	
RemoteIndex	DINT	Decimal	
RemoteElement	STRING		
LEN	DINT	Decimal	
DATA	SINT[82]	ASCII	
UnconnectedTimeout	DINT	Decimal	
ConnectionRate	DINT	Decimal	
TimeoutMultiplier	SINT	Decimal	

Data type Name: MINIMUM_CAPTURE

Description:

Size: 28 byte(s)

Name	Data Type	Style	Description
EnableIn	BOOL	Decimal	
In	REAL	Float	
Reset	BOOL	Decimal	
ResetValue	REAL	Float	
EnableOut	BOOL	Decimal	
Out	REAL	Float	

Data type Name: MMC

Description:

Size: 16388 byte(s)

Name	Data Type	Style	Description
EnableIn	BOOL	Decimal	
PV1	REAL	Float	
PV2	REAL	Float	
PV1Fault	BOOL	Decimal	
PV2Fault	BOOL	Decimal	
PV1EUMax	REAL	Float	
PV2EUMax	REAL	Float	
PV1EUMin	REAL	Float	
PV2EUMin	REAL	Float	
SP1Prog	REAL	Float	
SP2Prog	REAL	Float	
SP1Oper	REAL	Float	
SP2Oper	REAL	Float	
SP1HLimit	REAL	Float	
SP2HLimit	REAL	Float	
SP1LLimit	REAL	Float	
SP2LLimit	REAL	Float	
CV1Fault	BOOL	Decimal	
CV2Fault	BOOL	Decimal	
CV3Fault	BOOL	Decimal	
CV1InitReq	BOOL	Decimal	
CV2InitReq	BOOL	Decimal	
CV3InitReq	BOOL	Decimal	
CV1InitValue	REAL	Float	
CV2InitValue	REAL	Float	
CV3InitValue	REAL	Float	
CV1Prog	REAL	Float	
CV2Prog	REAL	Float	
CV3Prog	REAL	Float	
CV1Oper	REAL	Float	
CV2Oper	REAL	Float	
CV3Oper	REAL	Float	
CV1OverrideValue	REAL	Float	
CV2OverrideValue	REAL	Float	
CV3OverrideValue	REAL	Float	
CVManLimiting	BOOL	Decimal	
CV1EUMax	REAL	Float	
CV2EUMax	REAL	Float	

Name	Data Type	Style	Description
CV3EUMax	REAL	Float	
CV1EUMin	REAL	Float	
CV2EUMin	REAL	Float	
CV3EUMin	REAL	Float	
CV1HLimit	REAL	Float	
CV2HLimit	REAL	Float	
CV3HLimit	REAL	Float	
CV1LLimit	REAL	Float	
CV2LLimit	REAL	Float	
CV3LLimit	REAL	Float	
CV1ROCPosLimit	REAL	Float	
CV2ROCPosLimit	REAL	Float	
CV3ROCPosLimit	REAL	Float	
CV1ROCNegLimit	REAL	Float	
CV2ROCNegLimit	REAL	Float	
CV3ROCNegLimit	REAL	Float	
CV1HandFB	REAL	Float	
CV2HandFB	REAL	Float	
CV3HandFB	REAL	Float	
CV1HandFBFault	BOOL	Decimal	
CV2HandFBFault	BOOL	Decimal	
CV3HandFBFault	BOOL	Decimal	
CV1Target	REAL	Float	
CV2Target	REAL	Float	
CV3Target	REAL	Float	
CV1WindupHIn	BOOL	Decimal	
CV2WindupHIn	BOOL	Decimal	
CV3WindupHIn	BOOL	Decimal	
CV1WindupLIn	BOOL	Decimal	
CV2WindupLIn	BOOL	Decimal	
CV3WindupLIn	BOOL	Decimal	
GainEUSpan	BOOL	Decimal	
CV1PV1ProcessGainSign	BOOL	Decimal	
CV2PV1ProcessGainSign	BOOL	Decimal	
CV3PV1ProcessGainSign	BOOL	Decimal	
CV1PV2ProcessGainSign	BOOL	Decimal	
CV2PV2ProcessGainSign	BOOL	Decimal	
CV3PV2ProcessGainSign	BOOL	Decimal	

Name	Data Type	Style	Description
ProcessType	DINT	Decimal	
CV1PV1ModelGain	REAL	Float	
CV2PV1ModelGain	REAL	Float	
CV3PV1ModelGain	REAL	Float	
CV1PV2ModelGain	REAL	Float	
CV2PV2ModelGain	REAL	Float	
CV3PV2ModelGain	REAL	Float	
CV1PV1ModelTC	REAL	Float	
CV2PV1ModelTC	REAL	Float	
CV3PV1ModelTC	REAL	Float	
CV1PV2ModelTC	REAL	Float	
CV2PV2ModelTC	REAL	Float	
CV3PV2ModelTC	REAL	Float	
CV1PV1ModelDT	REAL	Float	
CV2PV1ModelDT	REAL	Float	
CV3PV1ModelDT	REAL	Float	
CV1PV2ModelDT	REAL	Float	
CV2PV2ModelDT	REAL	Float	
CV3PV2ModelDT	REAL	Float	
CV1PV1RespTC	REAL	Float	
CV2PV1RespTC	REAL	Float	
CV3PV1RespTC	REAL	Float	
CV1PV2RespTC	REAL	Float	
CV2PV2RespTC	REAL	Float	
CV3PV2RespTC	REAL	Float	
PV1Act1stCV	DINT	Decimal	
PV1Act2ndCV	DINT	Decimal	
PV1Act3rdCV	DINT	Decimal	
PV2Act1stCV	DINT	Decimal	
PV2Act2ndCV	DINT	Decimal	
PV2Act3rdCV	DINT	Decimal	
TargetCV	DINT	Decimal	
TargetRespTC	REAL	Float	
PVTracking	BOOL	Decimal	
ManualAfterInit	BOOL	Decimal	
ProgProgReq	BOOL	Decimal	
ProgOperReq	BOOL	Decimal	
ProgCV1AutoReq	BOOL	Decimal	

Name	Data Type	Style	Description
ProgCV2AutoReq	BOOL	Decimal	
ProgCV3AutoReq	BOOL	Decimal	
ProgCV1ManualReq	BOOL	Decimal	
ProgCV2ManualReq	BOOL	Decimal	
ProgCV3ManualReq	BOOL	Decimal	
ProgCV1OverrideReq	BOOL	Decimal	
ProgCV2OverrideReq	BOOL	Decimal	
ProgCV3OverrideReq	BOOL	Decimal	
ProgCV1HandReq	BOOL	Decimal	
ProgCV2HandReq	BOOL	Decimal	
ProgCV3HandReq	BOOL	Decimal	
OperProgReq	BOOL	Decimal	
OperOperReq	BOOL	Decimal	
OperCV1AutoReq	BOOL	Decimal	
OperCV2AutoReq	BOOL	Decimal	
OperCV3AutoReq	BOOL	Decimal	
OperCV1ManualReq	BOOL	Decimal	
OperCV2ManualReq	BOOL	Decimal	
OperCV3ManualReq	BOOL	Decimal	
ProgValueReset	BOOL	Decimal	
TimingMode	DINT	Decimal	
OversampleDT	REAL	Float	
RTSTime	DINT	Decimal	
RTSTimeStamp	DINT	Decimal	
PV1TuneLimit	REAL	Float	
PV2TuneLimit	REAL	Float	
PV1AtuneTimeLimit	REAL	Float	
PV2AtuneTimeLimit	REAL	Float	
PV1NoiseLevel	DINT	Decimal	
PV2NoiseLevel	DINT	Decimal	
CV1StepSize	REAL	Float	
CV2StepSize	REAL	Float	
CV3StepSize	REAL	Float	
CV1PV1ResponseSpeed	DINT	Decimal	
CV2PV1ResponseSpeed	DINT	Decimal	
CV3PV1ResponseSpeed	DINT	Decimal	
CV1PV2ResponseSpeed	DINT	Decimal	
CV2PV2ResponseSpeed	DINT	Decimal	

Name	Data Type	Style	Description
CV3PV2ResponseSpeed	DINT	Decimal	
CV1PV1ModelInit	BOOL	Decimal	
CV2PV1ModelInit	BOOL	Decimal	
CV3PV1ModelInit	BOOL	Decimal	
CV1PV2ModelInit	BOOL	Decimal	
CV2PV2ModelInit	BOOL	Decimal	
CV3PV2ModelInit	BOOL	Decimal	
PV1Factor	REAL	Float	
PV2Factor	REAL	Float	
AtuneCV1Start	BOOL	Decimal	
AtuneCV2Start	BOOL	Decimal	
AtuneCV3Start	BOOL	Decimal	
AtuneCV1PV1UseModel	BOOL	Decimal	
AtuneCV2PV1UseModel	BOOL	Decimal	
AtuneCV3PV1UseModel	BOOL	Decimal	
AtuneCV1PV2UseModel	BOOL	Decimal	
AtuneCV2PV2UseModel	BOOL	Decimal	
AtuneCV3PV2UseModel	BOOL	Decimal	
AtuneCV1Abort	BOOL	Decimal	
AtuneCV2Abort	BOOL	Decimal	
AtuneCV3Abort	BOOL	Decimal	
EnableOut	BOOL	Decimal	
CV1EU	REAL	Float	
CV2EU	REAL	Float	
CV3EU	REAL	Float	
CV1	REAL	Float	
CV2	REAL	Float	
CV3	REAL	Float	
CV1Initializing	BOOL	Decimal	
CV2Initializing	BOOL	Decimal	
CV3Initializing	BOOL	Decimal	
CV1HAlarm	BOOL	Decimal	
CV2HAlarm	BOOL	Decimal	
CV3HAlarm	BOOL	Decimal	
CV1LAlarm	BOOL	Decimal	
CV2LAlarm	BOOL	Decimal	
CV3LAlarm	BOOL	Decimal	
CV1ROCPosAlarm	BOOL	Decimal	

Name	Data Type	Style	Description
CV2ROCPosAlarm	BOOL	Decimal	
CV3ROCPosAlarm	BOOL	Decimal	
CV1ROCNegAlarm	BOOL	Decimal	
CV2ROCNegAlarm	BOOL	Decimal	
CV3ROCNegAlarm	BOOL	Decimal	
SP1	REAL	Float	
SP2	REAL	Float	
SP1Percent	REAL	Float	
SP2Percent	REAL	Float	
SP1HAlarm	BOOL	Decimal	
SP2HAlarm	BOOL	Decimal	
SP1LAlarm	BOOL	Decimal	
SP2LAlarm	BOOL	Decimal	
PV1Percent	REAL	Float	
PV2Percent	REAL	Float	
E1	REAL	Float	
E2	REAL	Float	
E1Percent	REAL	Float	
E2Percent	REAL	Float	
CV1WindupHOut	BOOL	Decimal	
CV2WindupHOut	BOOL	Decimal	
CV3WindupHOut	BOOL	Decimal	
CV1WindupLOut	BOOL	Decimal	
CV2WindupLOut	BOOL	Decimal	
CV3WindupLOut	BOOL	Decimal	
ProgOper	BOOL	Decimal	
CV1Auto	BOOL	Decimal	
CV2Auto	BOOL	Decimal	
CV3Auto	BOOL	Decimal	
CV1Manual	BOOL	Decimal	
CV2Manual	BOOL	Decimal	
CV3Manual	BOOL	Decimal	
CV1Override	BOOL	Decimal	
CV2Override	BOOL	Decimal	
CV3Override	BOOL	Decimal	
CV1Hand	BOOL	Decimal	
CV2Hand	BOOL	Decimal	
CV3Hand	BOOL	Decimal	

Name	Data Type	Style	Description
DeltaT	REAL	Float	
CV1StepSizeUsed	REAL	Float	
CV2StepSizeUsed	REAL	Float	
CV3StepSizeUsed	REAL	Float	
CV1PV1GainTuned	REAL	Float	
CV2PV1GainTuned	REAL	Float	
CV3PV1GainTuned	REAL	Float	
CV1PV2GainTuned	REAL	Float	
CV2PV2GainTuned	REAL	Float	
CV3PV2GainTuned	REAL	Float	
CV1PV1TCTuned	REAL	Float	
CV2PV1TCTuned	REAL	Float	
CV3PV1TCTuned	REAL	Float	
CV1PV2TCTuned	REAL	Float	
CV2PV2TCTuned	REAL	Float	
CV3PV2TCTuned	REAL	Float	
CV1PV1DTTuned	REAL	Float	
CV2PV1DTTuned	REAL	Float	
CV3PV1DTTuned	REAL	Float	
CV1PV2DTTuned	REAL	Float	
CV2PV2DTTuned	REAL	Float	
CV3PV2DTTuned	REAL	Float	
CV1PV1RespTCTunedS	REAL	Float	
CV2PV1RespTCTunedS	REAL	Float	
CV3PV1RespTCTunedS	REAL	Float	
CV1PV2RespTCTunedS	REAL	Float	
CV2PV2RespTCTunedS	REAL	Float	
CV3PV2RespTCTunedS	REAL	Float	
CV1PV1RespTCTunedM	REAL	Float	
CV2PV1RespTCTunedM	REAL	Float	
CV3PV1RespTCTunedM	REAL	Float	
CV1PV2RespTCTunedM	REAL	Float	
CV2PV2RespTCTunedM	REAL	Float	
CV3PV2RespTCTunedM	REAL	Float	
CV1PV1RespTCTunedF	REAL	Float	
CV2PV1RespTCTunedF	REAL	Float	
CV3PV1RespTCTunedF	REAL	Float	
CV1PV2RespTCTunedF	REAL	Float	

Name	Data Type	Style	Description
CV2PV2RespTCTunedF	REAL	Float	
CV3PV2RespTCTunedF	REAL	Float	
AtuneCV1PV1On	BOOL	Decimal	
AtuneCV2PV1On	BOOL	Decimal	
AtuneCV3PV1On	BOOL	Decimal	
AtuneCV1PV1Done	BOOL	Decimal	
AtuneCV2PV1Done	BOOL	Decimal	
AtuneCV3PV1Done	BOOL	Decimal	
AtuneCV1PV1Aborted	BOOL	Decimal	
AtuneCV2PV1Aborted	BOOL	Decimal	
AtuneCV3PV1Aborted	BOOL	Decimal	
AtuneCV1PV2On	BOOL	Decimal	
AtuneCV2PV2On	BOOL	Decimal	
AtuneCV3PV2On	BOOL	Decimal	
AtuneCV1PV2Done	BOOL	Decimal	
AtuneCV2PV2Done	BOOL	Decimal	
AtuneCV3PV2Done	BOOL	Decimal	
AtuneCV1PV2Aborted	BOOL	Decimal	
AtuneCV2PV2Aborted	BOOL	Decimal	
AtuneCV3PV2Aborted	BOOL	Decimal	
AtuneCV1PV1Status	DINT	Hex	
AtuneCV2PV1Status	DINT	Hex	
AtuneCV3PV1Status	DINT	Hex	
AtuneCV1PV2Status	DINT	Hex	
AtuneCV2PV2Status	DINT	Hex	
AtuneCV3PV2Status	DINT	Hex	
AtuneCV1PV1Fault	BOOL	Decimal	
AtuneCV1PV1OutOfLimit	BOOL	Decimal	
AtuneCV1PV1ModeInv	BOOL	Decimal	
AtuneCV1PV1WindupFault	BOOL	Decimal	
AtuneCV1PV1StepSize0	BOOL	Decimal	
AtuneCV1PV1LimitsFault	BOOL	Decimal	
AtuneCV1PV1InitFault	BOOL	Decimal	
AtuneCV1PV1EUSpanChanged	BOOL	Decimal	
AtuneCV1PV1Changed	BOOL	Decimal	
AtuneCV1PV1Timeout	BOOL	Decimal	
AtuneCV1PV1NotSettled	BOOL	Decimal	
AtuneCV2PV1Fault	BOOL	Decimal	

Name	Data Type	Style	Description
AtuneCV2PV1OutOfLimit	BOOL	Decimal	
AtuneCV2PV1ModeInv	BOOL	Decimal	
AtuneCV2PV1WindupFault	BOOL	Decimal	
AtuneCV2PV1StepSize0	BOOL	Decimal	
AtuneCV2PV1LimitsFault	BOOL	Decimal	
AtuneCV2PV1InitFault	BOOL	Decimal	
AtuneCV2PV1EUSpanChanged	BOOL	Decimal	
AtuneCV2PV1Changed	BOOL	Decimal	
AtuneCV2PV1Timeout	BOOL	Decimal	
AtuneCV2PV1NotSettled	BOOL	Decimal	
AtuneCV3PV1Fault	BOOL	Decimal	
AtuneCV3PV1OutOfLimit	BOOL	Decimal	
AtuneCV3PV1ModeInv	BOOL	Decimal	
AtuneCV3PV1WindupFault	BOOL	Decimal	
AtuneCV3PV1StepSize0	BOOL	Decimal	
AtuneCV3PV1LimitsFault	BOOL	Decimal	
AtuneCV3PV1InitFault	BOOL	Decimal	
AtuneCV3PV1EUSpanChanged	BOOL	Decimal	
AtuneCV3PV1Changed	BOOL	Decimal	
AtuneCV3PV1Timeout	BOOL	Decimal	
AtuneCV3PV1NotSettled	BOOL	Decimal	
AtuneCV1PV2Fault	BOOL	Decimal	
AtuneCV1PV2OutOfLimit	BOOL	Decimal	
AtuneCV1PV2ModeInv	BOOL	Decimal	
AtuneCV1PV2WindupFault	BOOL	Decimal	
AtuneCV1PV2StepSize0	BOOL	Decimal	
AtuneCV1PV2LimitsFault	BOOL	Decimal	
AtuneCV1PV2InitFault	BOOL	Decimal	
AtuneCV1PV2EUSpanChanged	BOOL	Decimal	
AtuneCV1PV2Changed	BOOL	Decimal	
AtuneCV1PV2Timeout	BOOL	Decimal	
AtuneCV1PV2NotSettled	BOOL	Decimal	
AtuneCV2PV2Fault	BOOL	Decimal	
AtuneCV2PV2OutOfLimit	BOOL	Decimal	
AtuneCV2PV2ModeInv	BOOL	Decimal	
AtuneCV2PV2WindupFault	BOOL	Decimal	
AtuneCV2PV2StepSize0	BOOL	Decimal	
AtuneCV2PV2LimitsFault	BOOL	Decimal	

Name	Data Type	Style	Description
AtuneCV2PV2InitFault	BOOL	Decimal	
AtuneCV2PV2EUSpanChanged	BOOL	Decimal	
AtuneCV2PV2Changed	BOOL	Decimal	
AtuneCV2PV2Timeout	BOOL	Decimal	
AtuneCV2PV2NotSettled	BOOL	Decimal	
AtuneCV3PV2Fault	BOOL	Decimal	
AtuneCV3PV2OutOfLimit	BOOL	Decimal	
AtuneCV3PV2ModeInv	BOOL	Decimal	
AtuneCV3PV2WindupFault	BOOL	Decimal	
AtuneCV3PV2StepSize0	BOOL	Decimal	
AtuneCV3PV2LimitsFault	BOOL	Decimal	
AtuneCV3PV2InitFault	BOOL	Decimal	
AtuneCV3PV2EUSpanChanged	BOOL	Decimal	
AtuneCV3PV2Changed	BOOL	Decimal	
AtuneCV3PV2Timeout	BOOL	Decimal	
AtuneCV3PV2NotSettled	BOOL	Decimal	
Status1	DINT	Hex	
Status2	DINT	Hex	
Status3CV1	DINT	Hex	
Status3CV2	DINT	Hex	
Status3CV3	DINT	Hex	
InstructFault	BOOL	Decimal	
PV1Faulted	BOOL	Decimal	
PV2Faulted	BOOL	Decimal	
PV1SpanInv	BOOL	Decimal	
PV2SpanInv	BOOL	Decimal	
SP1ProgInv	BOOL	Decimal	
SP2ProgInv	BOOL	Decimal	
SP1OperInv	BOOL	Decimal	
SP2OperInv	BOOL	Decimal	
SP1LimitsInv	BOOL	Decimal	
SP2LimitsInv	BOOL	Decimal	
SampleTimeTooSmall	BOOL	Decimal	
PV1FactorInv	BOOL	Decimal	
PV2FactorInv	BOOL	Decimal	
TimingModeInv	BOOL	Decimal	
RTSMissed	BOOL	Decimal	
RTSTimeInv	BOOL	Decimal	

Name	Data Type	Style	Description
RTSTimeStampInv	BOOL	Decimal	
DeltaTInv	BOOL	Decimal	
CV1Faulted	BOOL	Decimal	
CV1HandFBFaulted	BOOL	Decimal	
CV1ProgInv	BOOL	Decimal	
CV1OperInv	BOOL	Decimal	
CV1OverrideValueInv	BOOL	Decimal	
CV1EUSpanInv	BOOL	Decimal	
CV1LimitsInv	BOOL	Decimal	
CV1ROCLimitInv	BOOL	Decimal	
CV1HandFBInv	BOOL	Decimal	
CV1PV1ModelGainInv	BOOL	Decimal	
CV1PV2ModelGainInv	BOOL	Decimal	
CV1PV1ModelTCInv	BOOL	Decimal	
CV1PV2ModelTCInv	BOOL	Decimal	
CV1PV1ModelDTInv	BOOL	Decimal	
CV1PV2ModelDTInv	BOOL	Decimal	
CV1PV1RespTCInv	BOOL	Decimal	
CV1PV2RespTCInv	BOOL	Decimal	
CV1TargetInv	BOOL	Decimal	
CV2Faulted	BOOL	Decimal	
CV2HandFBFaulted	BOOL	Decimal	
CV2ProgInv	BOOL	Decimal	
CV2OperInv	BOOL	Decimal	
CV2OverrideValueInv	BOOL	Decimal	
CV2EUSpanInv	BOOL	Decimal	
CV2LimitsInv	BOOL	Decimal	
CV2ROCLimitInv	BOOL	Decimal	
CV2HandFBInv	BOOL	Decimal	
CV2PV1ModelGainInv	BOOL	Decimal	
CV2PV2ModelGainInv	BOOL	Decimal	
CV2PV1ModelTCInv	BOOL	Decimal	
CV2PV2ModelTCInv	BOOL	Decimal	
CV2PV1ModelDTInv	BOOL	Decimal	
CV2PV2ModelDTInv	BOOL	Decimal	
CV2PV1RespTCInv	BOOL	Decimal	
CV2PV2RespTCInv	BOOL	Decimal	
CV2TargetInv	BOOL	Decimal	

Name	Data Type	Style	Description
CV3Faulted	BOOL	Decimal	
CV3HandFBFaulted	BOOL	Decimal	
CV3ProgInv	BOOL	Decimal	
CV3OperInv	BOOL	Decimal	
CV3OverrideValueInv	BOOL	Decimal	
CV3EUSpanInv	BOOL	Decimal	
CV3LimitsInv	BOOL	Decimal	
CV3ROCLimitInv	BOOL	Decimal	
CV3HandFBInv	BOOL	Decimal	
CV3PV1ModelGainInv	BOOL	Decimal	
CV3PV2ModelGainInv	BOOL	Decimal	
CV3PV1ModelTCInv	BOOL	Decimal	
CV3PV2ModelTCInv	BOOL	Decimal	
CV3PV1ModelDTInv	BOOL	Decimal	
CV3PV2ModelDTInv	BOOL	Decimal	
CV3PV1RespTCInv	BOOL	Decimal	
CV3PV2RespTCInv	BOOL	Decimal	
CV3TargetInv	BOOL	Decimal	

Data type Name: MOTION_GROUP

Description:

Size: 60 byte(s)

Name	Data Type	Style	Description
GroupStatus	DINT	Hex	
InhibStatus	BOOL	Decimal	
GroupSynced	BOOL	Decimal	
AxisInhibitStatus	BOOL	Decimal	
GroupFault	DINT	Hex	
GroupOverlapFault	BOOL	Decimal	
CSTLossFault	BOOL	Decimal	
GroupTaskLoadingFault	BOOL	Decimal	
AxisFault	DINT	Hex	
PhysicalAxisFault	BOOL	Decimal	
ModuleFault	BOOL	Decimal	
ConfigFault	BOOL	Decimal	

Data type Name: MOTION_INSTRUCTION

Description:

Size: 16 byte(s)

Name	Data Type	Style	Description
FLAGS	DINT	Decimal	
EN	BOOL	Decimal	
DN	BOOL	Decimal	
ER	BOOL	Decimal	
PC	BOOL	Decimal	
IP	BOOL	Decimal	
AC	BOOL	Decimal	
ACCEL	BOOL	Decimal	
DECEL	BOOL	Decimal	
ERR	INT	Decimal	
STATUS	SINT	Decimal	
STATE	SINT	Decimal	
SEGMENT	DINT	Decimal	
EXERR	SINT	Decimal	

Data type Name: MOVING_AVERAGE

Description:

Size: 52 byte(s)

Name	Data Type	Style	Description
EnableIn	BOOL	Decimal	
In	REAL	Float	
InFault	BOOL	Decimal	
Initialize	BOOL	Decimal	
SampleEnable	BOOL	Decimal	
NumberOfSamples	DINT	Decimal	
UseWeights	BOOL	Decimal	
EnableOut	BOOL	Decimal	
Out	REAL	Float	
Status	DINT	Hex	
InstructFault	BOOL	Decimal	
InFaulted	BOOL	Decimal	
NumberOfSampInv	BOOL	Decimal	

Data type Name: MOVING_STD_DEV

Description:

Size: 60 byte(s)

Name	Data Type	Style	Description
EnableIn	BOOL	Decimal	
In	REAL	Float	
InFault	BOOL	Decimal	
Initialize	BOOL	Decimal	
SampleEnable	BOOL	Decimal	
NumberOfSamples	DINT	Decimal	
EnableOut	BOOL	Decimal	
Out	REAL	Float	
Average	REAL	Float	
Status	DINT	Hex	
InstructFault	BOOL	Decimal	
InFaulted	BOOL	Decimal	
NumberOfSampInv	BOOL	Decimal	

Data type Name: MULTIPLEXER

Description:

Size: 60 byte(s)

Name	Data Type	Style	Description
EnableIn	BOOL	Decimal	
In1	REAL	Float	
In2	REAL	Float	
In3	REAL	Float	
In4	REAL	Float	
In5	REAL	Float	
In6	REAL	Float	
In7	REAL	Float	
In8	REAL	Float	
Selector	DINT	Decimal	
EnableOut	BOOL	Decimal	
Out	REAL	Float	
Status	DINT	Hex	
InstructFault	BOOL	Decimal	
SelectorInv	BOOL	Decimal	

Data type Name: MUTING_FOUR_SENSOR_BIDIR

Description:

Size: 104 byte(s)

Name	Data Type	Style	Description
EnableIn	BOOL	Decimal	
RestartType	BOOL	Decimal	
LightCurtain	BOOL	Decimal	
Sensor1	BOOL	Decimal	
Sensor2	BOOL	Decimal	
Sensor3	BOOL	Decimal	
Sensor4	BOOL	Decimal	
EnableMute	BOOL	Decimal	
Override	BOOL	Decimal	
InputStatus	BOOL	Decimal	
MutingLampStatus	BOOL	Decimal	
Reset	BOOL	Decimal	
Direction	BOOL	Decimal	
S1S2Time	DINT	Decimal	
S2LCTime	DINT	Decimal	
LCS3Time	DINT	Decimal	
S3S4Time	DINT	Decimal	
MaximumMuteTime	DINT	Decimal	
MaximumOverrideTime	DINT	Decimal	
EnableOut	BOOL	Decimal	
O1	BOOL	Decimal	
ML	BOOL	Decimal	
CA	BOOL	Decimal	
FP	BOOL	Decimal	
FaultCode	DINT	Decimal	
DiagnosticCode	DINT	Decimal	

Data type Name: MUTING_TWO_SENSOR_ASYM

Description:

Size: 104 byte(s)

Name	Data Type	Style	Description
EnableIn	BOOL	Decimal	
RestartType	BOOL	Decimal	
LightCurtain	BOOL	Decimal	
Sensor1	BOOL	Decimal	
Sensor2	BOOL	Decimal	
Reserved1	BOOL	Decimal	
Reserved2	BOOL	Decimal	
EnableMute	BOOL	Decimal	
Override	BOOL	Decimal	
InputStatus	BOOL	Decimal	
MutingLampStatus	BOOL	Decimal	
Reset	BOOL	Decimal	
S1S2Time	DINT	Decimal	
S2LCTime	DINT	Decimal	
Reserved3	DINT	Decimal	
Reserved4	DINT	Decimal	
MaximumMuteTime	DINT	Decimal	
MaximumOverrideTime	DINT	Decimal	
EnableOut	BOOL	Decimal	
O1	BOOL	Decimal	
ML	BOOL	Decimal	
CA	BOOL	Decimal	
FP	BOOL	Decimal	
FaultCode	DINT	Decimal	
DiagnosticCode	DINT	Decimal	

Data type Name: MUTING_TWO_SENSOR_SYM

Description:

Size: 104 byte(s)

Name	Data Type	Style	Description
EnableIn	BOOL	Decimal	
RestartType	BOOL	Decimal	
LightCurtain	BOOL	Decimal	
Sensor1	BOOL	Decimal	
Sensor2	BOOL	Decimal	
Reserved1	BOOL	Decimal	
Reserved2	BOOL	Decimal	
EnableMute	BOOL	Decimal	
Override	BOOL	Decimal	
InputStatus	BOOL	Decimal	
MutingLampStatus	BOOL	Decimal	
Reset	BOOL	Decimal	
S1S2DiscrepancyTime	DINT	Decimal	
S1S2LCMinimumTime	DINT	Decimal	
S1S2LCMaximumTime	DINT	Decimal	
Reserved3	DINT	Decimal	
MaximumMuteTime	DINT	Decimal	
MaximumOverrideTime	DINT	Decimal	
EnableOut	BOOL	Decimal	
O1	BOOL	Decimal	
ML	BOOL	Decimal	
CA	BOOL	Decimal	
FP	BOOL	Decimal	
FaultCode	DINT	Decimal	
DiagnosticCode	DINT	Decimal	

Data type Name: OUTPUT_CAM

Description:

Size: 32 byte(s)

Name	Data Type	Style	Description
OutputBit	DINT	Decimal	
LatchType	DINT	Decimal	
UnlatchType	DINT	Decimal	
Left	REAL	Float	
Right	REAL	Float	
Duration	REAL	Float	
EnableType	DINT	Decimal	
EnableBit	DINT	Decimal	

Data type Name: OUTPUT_COMPENSATION

Description:

Size: 24 byte(s)

Name	Data Type	Style	Description
Offset	REAL	Float	
LatchDelay	REAL	Float	
UnlatchDelay	REAL	Float	
Mode	DINT	Decimal	
CycleTime	REAL	Float	
DutyCycle	REAL	Float	

Data type Name: PHASE

Description:

Size: 32 byte(s)

Name	Data Type	Style	Description
State	DINT	Decimal	
Running	BOOL	Decimal	
Holding	BOOL	Decimal	
Restarting	BOOL	Decimal	
Stopping	BOOL	Decimal	
Aborting	BOOL	Decimal	
Resetting	BOOL	Decimal	
Idle	BOOL	Decimal	
Held	BOOL	Decimal	
Complete	BOOL	Decimal	
Stopped	BOOL	Decimal	
Aborted	BOOL	Decimal	
Substate	DINT	Decimal	
Pausing	BOOL	Decimal	
Paused	BOOL	Decimal	
AutoPause	BOOL	Decimal	
StepIndex	DINT	Decimal	
Failure	DINT	Decimal	
UnitID	DINT	Decimal	
Owner	DINT	Hex	
PendingRequest	DINT	Decimal	
DownloadInputParameters	BOOL	Decimal	
DownloadInputParametersSubset	BOOL	Decimal	
UploadOutputParameters	BOOL	Decimal	
UploadOutputParametersSubset	BOOL	Decimal	
DownloadOutputParameterLimits	BOOL	Decimal	
AcquireResources	BOOL	Decimal	
ReleaseResources	BOOL	Decimal	
SendMessageToLinkedPhase	BOOL	Decimal	
SendMessageToLinkedPhaseAndWait	BOOL	Decimal	
ReceiveMessageFromLinkedPhase	BOOL	Decimal	
CancelMessageToLinkedPhase	BOOL	Decimal	
SendMessageToOperator	BOOL	Decimal	
ClearMessageToOperator	BOOL	Decimal	
GenerateESignature	BOOL	Decimal	
DownloadBatchData	BOOL	Decimal	
DownloadMaterialTrackDataContainerInUse	BOOL	Decimal	

Name	Data Type	Style	Description
DownloadContainerBindingPriority	BOOL	Decimal	
DownloadSufficientMaterial	BOOL	Decimal	
DownloadMaterialTrackDatabaseData	BOOL	Decimal	
UploadMaterialTrackDataContainerInUse	BOOL	Decimal	
UploadContainerBindingPriority	BOOL	Decimal	
UploadMaterialTrackDatabaseData	BOOL	Decimal	
AbortingRequest	BOOL	Decimal	
NewInputParameters	BOOL	Decimal	
Producing	BOOL	Decimal	
Standby	BOOL	Decimal	

Data type Name: PHASE_INSTRUCTION

Description:

Size: 8 byte(s)

Name	Data Type	Style	Description
Status	DINT	Hex	
EN	BOOL	Decimal	
ER	BOOL	Decimal	
PC	BOOL	Decimal	
IP	BOOL	Decimal	
WA	BOOL	Decimal	
ABORT	BOOL	Decimal	
ERR	INT	Hex	
EXERR	INT	Hex	

Data type Name: PID

Description:

Size: 184 byte(s)

Name	Data Type	Style	Description
CTL	DINT	Decimal	
EN	BOOL	Decimal	
CT	BOOL	Decimal	
CL	BOOL	Decimal	
PVT	BOOL	Decimal	
DOE	BOOL	Decimal	
SWM	BOOL	Decimal	
CA	BOOL	Decimal	
MO	BOOL	Decimal	
PE	BOOL	Decimal	
NDF	BOOL	Decimal	
NOBC	BOOL	Decimal	
NOZC	BOOL	Decimal	
INI	BOOL	Decimal	
SPOR	BOOL	Decimal	
OLL	BOOL	Decimal	
OLH	BOOL	Decimal	
EWD	BOOL	Decimal	
DVNA	BOOL	Decimal	
DVPA	BOOL	Decimal	
PVLA	BOOL	Decimal	
PVHA	BOOL	Decimal	
SP	REAL	Float	
KP	REAL	Float	
KI	REAL	Float	
KD	REAL	Float	
BIAS	REAL	Float	
MAXS	REAL	Float	
MINS	REAL	Float	
DB	REAL	Float	
SO	REAL	Float	
MAXO	REAL	Float	
MINO	REAL	Float	
UPD	REAL	Float	
PV	REAL	Float	
ERR	REAL	Float	
OUT	REAL	Float	
PVH	REAL	Float	

Name	Data Type	Style	Description
PVL	REAL	Float	
DVP	REAL	Float	
DVN	REAL	Float	
PVDB	REAL	Float	
DVDB	REAL	Float	
MAXI	REAL	Float	
MINI	REAL	Float	
TIE	REAL	Float	
MAXCV	REAL	Float	
MINCV	REAL	Float	
MINTIE	REAL	Float	
MAXTIE	REAL	Float	
DATA	REAL[17]	Float	

Data type Name: PIDE_AUTOTUNE

Description:

Size: 972 byte(s)

Name	Data Type	Style	Description
ProcessType	DINT	Decimal	
ResponseSpeed	DINT	Decimal	
TestLength	REAL	Float	
PVTuneLimit	REAL	Float	
StepSize	REAL	Float	
TunedGood	BOOL	Decimal	
TunedUncertain	BOOL	Decimal	
ATuneAcquired	BOOL	Decimal	
UsedProcessType	DINT	Decimal	
Gain	REAL	Float	
TimeConstant	REAL	Float	
DeadTime	REAL	Float	
PGainTunedFast	REAL	Float	
IGainTunedFast	REAL	Float	
DGainTunedFast	REAL	Float	
PGainTunedMed	REAL	Float	
IGainTunedMed	REAL	Float	
DGainTunedMed	REAL	Float	
PGainTunedSlow	REAL	Float	
IGainTunedSlow	REAL	Float	
DGainTunedSlow	REAL	Float	
StepSizeUsed	REAL	Float	
AtuneStatus	DINT	Hex	
ATuneFault	BOOL	Decimal	
PVOutOfLimit	BOOL	Decimal	
ModeInv	BOOL	Decimal	
CVWindupFault	BOOL	Decimal	
StepSizeZero	BOOL	Decimal	
CVLimitsFault	BOOL	Decimal	
CVInitFault	BOOL	Decimal	
EUSpanChanged	BOOL	Decimal	
CVChanged	BOOL	Decimal	
ATuneTimedOut	BOOL	Decimal	
PVNotSettled	BOOL	Decimal	
PVChangeTooSmall	BOOL	Decimal	
StepSizeTooSmall	BOOL	Decimal	
GainTooLarge	BOOL	Decimal	
GainTooSmall	BOOL	Decimal	

Name	Data Type	Style	Description
LongDeadTime	BOOL	Decimal	

Data type Name: PID_ENHANCED

Description:

Size: 400 byte(s)

Name	Data Type	Style	Description
EnableIn	BOOL	Decimal	
PV	REAL	Float	
PVFault	BOOL	Decimal	
PVEUMax	REAL	Float	
PVEUMin	REAL	Float	
SPProg	REAL	Float	
SPOper	REAL	Float	
SPCascade	REAL	Float	
SPHLimit	REAL	Float	
SPLLimit	REAL	Float	
UseRatio	BOOL	Decimal	
RatioProg	REAL	Float	
RatioOper	REAL	Float	
RatioHLimit	REAL	Float	
RatioLLimit	REAL	Float	
CVFault	BOOL	Decimal	
CVInitReq	BOOL	Decimal	
CVInitValue	REAL	Float	
CVProg	REAL	Float	
CVOper	REAL	Float	
CVOverride	REAL	Float	
CVPrevious	REAL	Float	
CVSetPrevious	BOOL	Decimal	
CVManLimiting	BOOL	Decimal	
CVEUMax	REAL	Float	
CVEUMin	REAL	Float	
CVHLimit	REAL	Float	
CVLLimit	REAL	Float	
CVROCLimit	REAL	Float	
FF	REAL	Float	
FFPrevious	REAL	Float	
FFSetPrevious	BOOL	Decimal	
HandFB	REAL	Float	
HandFBFault	BOOL	Decimal	
WindupHIn	BOOL	Decimal	
WindupLIn	BOOL	Decimal	
ControlAction	BOOL	Decimal	
DependIndepend	BOOL	Decimal	

Name	Data Type	Style	Description
PGain	REAL	Float	
IGain	REAL	Float	
DGain	REAL	Float	
PVEProportional	BOOL	Decimal	
PVEDerivative	BOOL	Decimal	
DSmoothing	BOOL	Decimal	
PVTracking	BOOL	Decimal	
ZCDeadband	REAL	Float	
ZCOff	BOOL	Decimal	
PVHHLimit	REAL	Float	
PVHLimit	REAL	Float	
PVLLimit	REAL	Float	
PVLLLimit	REAL	Float	
PVDeadband	REAL	Float	
PVROCPosLimit	REAL	Float	
PVROCNegLimit	REAL	Float	
PVROCPeriod	REAL	Float	
DevHHLimit	REAL	Float	
DevHLimit	REAL	Float	
DevLLimit	REAL	Float	
DevLLLimit	REAL	Float	
DevDeadband	REAL	Float	
AllowCasRat	BOOL	Decimal	
ManualAfterInit	BOOL	Decimal	
ProgProgReq	BOOL	Decimal	
ProgOperReq	BOOL	Decimal	
ProgCasRatReq	BOOL	Decimal	
ProgAutoReq	BOOL	Decimal	
ProgManualReq	BOOL	Decimal	
ProgOverrideReq	BOOL	Decimal	
ProgHandReq	BOOL	Decimal	
OperProgReq	BOOL	Decimal	
OperOperReq	BOOL	Decimal	
OperCasRatReq	BOOL	Decimal	
OperAutoReq	BOOL	Decimal	
OperManualReq	BOOL	Decimal	
ProgValueReset	BOOL	Decimal	
TimingMode	DINT	Decimal	

Name	Data Type	Style	Description
OversampleDT	REAL	Float	
RTSTime	DINT	Decimal	
RTSTimeStamp	DINT	Decimal	
AtuneAcquire	BOOL	Decimal	
AtuneStart	BOOL	Decimal	
AtuneUseGains	BOOL	Decimal	
AtuneAbort	BOOL	Decimal	
AtuneUnacquire	BOOL	Decimal	
EnableOut	BOOL	Decimal	
CVEU	REAL	Float	
CV	REAL	Float	
CVInitializing	BOOL	Decimal	
CVHAlarm	BOOL	Decimal	
CVLAlarm	BOOL	Decimal	
CVROCAlarm	BOOL	Decimal	
SP	REAL	Float	
SPPercent	REAL	Float	
SPHAlarm	BOOL	Decimal	
SPLAlarm	BOOL	Decimal	
PVPercent	REAL	Float	
E	REAL	Float	
EPercent	REAL	Float	
InitPrimary	BOOL	Decimal	
WindupHOut	BOOL	Decimal	
WindupLOut	BOOL	Decimal	
Ratio	REAL	Float	
RatioHAlarm	BOOL	Decimal	
RatioLAlarm	BOOL	Decimal	
ZCDeadbandOn	BOOL	Decimal	
PVHHAlarm	BOOL	Decimal	
PVHAlarm	BOOL	Decimal	
PVLAlarm	BOOL	Decimal	
PVLLAlarm	BOOL	Decimal	
PVROCPosAlarm	BOOL	Decimal	
PVROCNegAlarm	BOOL	Decimal	
DevHHAlarm	BOOL	Decimal	
DevHAlarm	BOOL	Decimal	
DevLAlarm	BOOL	Decimal	

Name	Data Type	Style	Description
DevLLAlarm	BOOL	Decimal	
ProgOper	BOOL	Decimal	
CasRat	BOOL	Decimal	
Auto	BOOL	Decimal	
Manual	BOOL	Decimal	
Override	BOOL	Decimal	
Hand	BOOL	Decimal	
DeltaT	REAL	Float	
AtuneReady	BOOL	Decimal	
AtuneOn	BOOL	Decimal	
AtuneDone	BOOL	Decimal	
AtuneAborted	BOOL	Decimal	
AtuneBusy	BOOL	Decimal	
Status1	DINT	Hex	
Status2	DINT	Hex	
InstructFault	BOOL	Decimal	
PVFaulted	BOOL	Decimal	
CVFaulted	BOOL	Decimal	
HandFBFaulted	BOOL	Decimal	
PVSpanInv	BOOL	Decimal	
SPProgInv	BOOL	Decimal	
SPOperInv	BOOL	Decimal	
SPCascadeInv	BOOL	Decimal	
SPLimitsInv	BOOL	Decimal	
RatioProgInv	BOOL	Decimal	
RatioOperInv	BOOL	Decimal	
RatioLimitsInv	BOOL	Decimal	
CVProgInv	BOOL	Decimal	
CVOperInv	BOOL	Decimal	
CVOverrideInv	BOOL	Decimal	
CVPreviousInv	BOOL	Decimal	
CVEUSpanInv	BOOL	Decimal	
CVLimitsInv	BOOL	Decimal	
CVROCLimitInv	BOOL	Decimal	
FFInv	BOOL	Decimal	
FFPreviousInv	BOOL	Decimal	
HandFBInv	BOOL	Decimal	
PGainInv	BOOL	Decimal	

Name	Data Type	Style	Description
IGainInv	BOOL	Decimal	
DGainInv	BOOL	Decimal	
ZCDeadbandInv	BOOL	Decimal	
PVDeadbandInv	BOOL	Decimal	
PVROCLimitsInv	BOOL	Decimal	
DevHLLimitsInv	BOOL	Decimal	
DevDeadbandInv	BOOL	Decimal	
AtuneDataInv	BOOL	Decimal	
TimingModeInv	BOOL	Decimal	
RTSMissed	BOOL	Decimal	
RTSTimeInv	BOOL	Decimal	
RTSTimeStampInv	BOOL	Decimal	
DeltaTInv	BOOL	Decimal	

Data type Name: POSITION_PROP

Description:

Size: 124 byte(s)

Name	Data Type	Style	Description
EnableIn	BOOL	Decimal	
SP	REAL	Float	
Position	REAL	Float	
OpenedFB	BOOL	Decimal	
ClosedFB	BOOL	Decimal	
PositionEUMax	REAL	Float	
PositionEUMin	REAL	Float	
CycleTime	REAL	Float	
OpenRate	REAL	Float	
CloseRate	REAL	Float	
MaxOnTime	REAL	Float	
MinOnTime	REAL	Float	
Deadtime	REAL	Float	
EnableOut	BOOL	Decimal	
OpenOut	BOOL	Decimal	
CloseOut	BOOL	Decimal	
PositionPercent	REAL	Float	
SPPercent	REAL	Float	
OpenTime	REAL	Float	
CloseTime	REAL	Float	
Status	DINT	Hex	
InstructFault	BOOL	Decimal	
CycleTimeInv	BOOL	Decimal	
OpenRateInv	BOOL	Decimal	
CloseRateInv	BOOL	Decimal	
MaxOnTimeInv	BOOL	Decimal	
MinOnTimeInv	BOOL	Decimal	
DeadtimeInv	BOOL	Decimal	
PositionPctInv	BOOL	Decimal	
SPPercentInv	BOOL	Decimal	
PositionSpanInv	BOOL	Decimal	

Data type Name: PROP_INT

Description:

Size: 136 byte(s)

Name	Data Type	Style	Description
EnableIn	BOOL	Decimal	
In	REAL	Float	
Initialize	BOOL	Decimal	
InitialValue	REAL	Float	
Kp	REAL	Float	
Wld	REAL	Float	
HighLimit	REAL	Float	
LowLimit	REAL	Float	
HoldHigh	BOOL	Decimal	
HoldLow	BOOL	Decimal	
ShapeKpPlus	REAL	Float	
ShapeKpMinus	REAL	Float	
KpInRange	REAL	Float	
ShapeWldPlus	REAL	Float	
ShapeWldMinus	REAL	Float	
WldInRange	REAL	Float	
NonLinearMode	BOOL	Decimal	
ParabolicLinear	BOOL	Decimal	
TimingMode	DINT	Decimal	
OversampleDT	REAL	Float	
RTSTime	DINT	Decimal	
RTSTimeStamp	DINT	Decimal	
EnableOut	BOOL	Decimal	
Out	REAL	Float	
HighAlarm	BOOL	Decimal	
LowAlarm	BOOL	Decimal	
DeltaT	REAL	Float	
Status	DINT	Hex	
InstructFault	BOOL	Decimal	
KpInv	BOOL	Decimal	
WldInv	BOOL	Decimal	
HighLowLimsInv	BOOL	Decimal	
ShapeKpPlusInv	BOOL	Decimal	
ShapeKpMinusInv	BOOL	Decimal	
KpInRangeInv	BOOL	Decimal	
ShapeWldPlusInv	BOOL	Decimal	
ShapeWldMinusInv	BOOL	Decimal	
WldInRangeInv	BOOL	Decimal	

Name	Data Type	Style	Description
TimingModeInv	BOOL	Decimal	
RTSMissed	BOOL	Decimal	
RTSTimeInv	BOOL	Decimal	
RTSTimeStampInv	BOOL	Decimal	
DeltaTInv	BOOL	Decimal	

Data type Name: PULSE_MULTIPLIER

Description:

Size: 48 byte(s)

Name	Data Type	Style	Description
EnableIn	BOOL	Decimal	
In	DINT	Decimal	
Initialize	BOOL	Decimal	
InitialValue	DINT	Decimal	
Mode	BOOL	Decimal	
WordSize	DINT	Decimal	
Multiplier	DINT	Decimal	
EnableOut	BOOL	Decimal	
Out	REAL	Float	
Status	DINT	Hex	
InstructFault	BOOL	Decimal	
WordSizeInv	BOOL	Decimal	
OutOverflow	BOOL	Decimal	
LostPrecision	BOOL	Decimal	
MultiplierInv	BOOL	Decimal	

Data type Name: RAMP_SOAK

Description:

Size: 108 byte(s)

Name	Data Type	Style	Description
EnableIn	BOOL	Decimal	
PV	REAL	Float	
PVFault	BOOL	Decimal	
NumberOfSegs	DINT	Decimal	
ManHoldAftInit	BOOL	Decimal	
CyclicSingle	BOOL	Decimal	
TimeRate	BOOL	Decimal	
GuarRamp	BOOL	Decimal	
RampDeadband	REAL	Float	
GuarSoak	BOOL	Decimal	
SoakDeadband	REAL	Float	
CurrentSegProg	DINT	Decimal	
OutProg	REAL	Float	
SoakTimeProg	REAL	Float	
CurrentSegOper	DINT	Decimal	
OutOper	REAL	Float	
SoakTimeOper	REAL	Float	
ProgProgReq	BOOL	Decimal	
ProgOperReq	BOOL	Decimal	
ProgAutoReq	BOOL	Decimal	
ProgManualReq	BOOL	Decimal	
ProgHoldReq	BOOL	Decimal	
OperProgReq	BOOL	Decimal	
OperOperReq	BOOL	Decimal	
OperAutoReq	BOOL	Decimal	
OperManualReq	BOOL	Decimal	
Initialize	BOOL	Decimal	
ProgValueReset	BOOL	Decimal	
EnableOut	BOOL	Decimal	
Out	REAL	Float	
CurrentSeg	DINT	Decimal	
SoakTimeLeft	REAL	Float	
GuarRampOn	BOOL	Decimal	
GuarSoakOn	BOOL	Decimal	
ProgOper	BOOL	Decimal	
Auto	BOOL	Decimal	
Manual	BOOL	Decimal	
Hold	BOOL	Decimal	

Name	Data Type	Style	Description
Status	DINT	Hex	
InstructFault	BOOL	Decimal	
PVFaulted	BOOL	Decimal	
NumberOfSegsInv	BOOL	Decimal	
RampDeadbandInv	BOOL	Decimal	
SoakDeadbandInv	BOOL	Decimal	
CurrSegProgInv	BOOL	Decimal	
SoakTimeProgInv	BOOL	Decimal	
CurrSegOperInv	BOOL	Decimal	
SoakTimeOperInv	BOOL	Decimal	
RampValueInv	BOOL	Decimal	
SoakTimeInv	BOOL	Decimal	

Data type Name: RATE_LIMITER

Description:

Size: 96 byte(s)

Name	Data Type	Style	Description
EnableIn	BOOL	Decimal	
In	REAL	Float	
IncRate	REAL	Float	
DecRate	REAL	Float	
ByPass	BOOL	Decimal	
TimingMode	DINT	Decimal	
OversampleDT	REAL	Float	
RTSTime	DINT	Decimal	
RTSTimeStamp	DINT	Decimal	
EnableOut	BOOL	Decimal	
Out	REAL	Float	
DeltaT	REAL	Float	
Status	DINT	Hex	
InstructFault	BOOL	Decimal	
IncRateInv	BOOL	Decimal	
DecRateInv	BOOL	Decimal	
TimingModeInv	BOOL	Decimal	
RTSMissed	BOOL	Decimal	
RTSTimeInv	BOOL	Decimal	
RTSTimeStampInv	BOOL	Decimal	
DeltaTInv	BOOL	Decimal	

Data type Name: REDUNDANT_INPUT

Description:

Size: 52 byte(s)

Name	Data Type	Style	Description
EnableIn	BOOL	Decimal	
ResetType	BOOL	Decimal	
ChannelA	BOOL	Decimal	
ChannelB	BOOL	Decimal	
CircuitReset	BOOL	Decimal	
FaultReset	BOOL	Decimal	
EnableOut	BOOL	Decimal	
O1	BOOL	Decimal	
CI	BOOL	Decimal	
CRHO	BOOL	Decimal	
II	BOOL	Decimal	
FP	BOOL	Decimal	

Data type Name: REDUNDANT_OUTPUT

Description:

Size: 36 byte(s)

Name	Data Type	Style	Description
EnableIn	BOOL	Decimal	
FeedbackType	BOOL	Decimal	
Enable	BOOL	Decimal	
Feedback1	BOOL	Decimal	
Feedback2	BOOL	Decimal	
FaultReset	BOOL	Decimal	
EnableOut	BOOL	Decimal	
O1	BOOL	Decimal	
O2	BOOL	Decimal	
O1FF	BOOL	Decimal	
O2FF	BOOL	Decimal	
FP	BOOL	Decimal	

Data type Name: SAFETY_MAT

Description:

Size: 44 byte(s)

Name	Data Type	Style	Description
EnableIn	BOOL	Decimal	
RestartType	BOOL	Decimal	
ChannelA	BOOL	Decimal	
ChannelB	BOOL	Decimal	
InputStatus	BOOL	Decimal	
Reset	BOOL	Decimal	
ShortCircuitDetectDelayTime	DINT	Decimal	
EnableOut	BOOL	Decimal	
O1	BOOL	Decimal	
SRCA	BOOL	Decimal	
SRCB	BOOL	Decimal	
FP	BOOL	Decimal	
FaultCode	DINT	Decimal	
DiagnosticCode	DINT	Decimal	

Data type Name: SCALE

Description:

Size: 52 byte(s)

Name	Data Type	Style	Description
EnableIn	BOOL	Decimal	
In	REAL	Float	
InRawMax	REAL	Float	
InRawMin	REAL	Float	
InEUMax	REAL	Float	
InEUMin	REAL	Float	
Limiting	BOOL	Decimal	
EnableOut	BOOL	Decimal	
Out	REAL	Float	
MaxAlarm	BOOL	Decimal	
MinAlarm	BOOL	Decimal	
Status	DINT	Hex	
InstructFault	BOOL	Decimal	
InRawRangeInv	BOOL	Decimal	

Data type Name: SEC_ORDER_CONTROLLER

Description:

Size: 176 byte(s)

Name	Data Type	Style	Description
EnableIn	BOOL	Decimal	
In	REAL	Float	
Initialize	BOOL	Decimal	
InitialValue	REAL	Float	
Gain	REAL	Float	
WLag	REAL	Float	
WLead	REAL	Float	
ZetaLead	REAL	Float	
HighLimit	REAL	Float	
LowLimit	REAL	Float	
HoldHigh	BOOL	Decimal	
HoldLow	BOOL	Decimal	
TimingMode	DINT	Decimal	
OversampleDT	REAL	Float	
RTSTime	DINT	Decimal	
RTSTimeStamp	DINT	Decimal	
EnableOut	BOOL	Decimal	
Out	REAL	Float	
HighAlarm	BOOL	Decimal	
LowAlarm	BOOL	Decimal	
DeltaT	REAL	Float	
Status	DINT	Hex	
InstructFault	BOOL	Decimal	
GainInv	BOOL	Decimal	
WLagInv	BOOL	Decimal	
WLeadInv	BOOL	Decimal	
ZetaLeadInv	BOOL	Decimal	
HighLowLimsInv	BOOL	Decimal	
TimingModeInv	BOOL	Decimal	
RTSMissed	BOOL	Decimal	
RTSTimeInv	BOOL	Decimal	
RTSTimeStampInv	BOOL	Decimal	
DeltaTInv	BOOL	Decimal	

Data type Name: SELECT

Description:

Size: 24 byte(s)

Name	Data Type	Style	Description
EnableIn	BOOL	Decimal	
In1	REAL	Float	
In2	REAL	Float	
SelectorIn	BOOL	Decimal	
EnableOut	BOOL	Decimal	
Out	REAL	Float	

Data type Name: SELECTABLE_NEGATE

Description:

Size: 20 byte(s)

Name	Data Type	Style	Description
EnableIn	BOOL	Decimal	
In	REAL	Float	
NegateEnable	BOOL	Decimal	
EnableOut	BOOL	Decimal	
Out	REAL	Float	

Data type Name: SELECTED_SUMMER

Description:

Size: 84 byte(s)

Name	Data Type	Style	Description
EnableIn	BOOL	Decimal	
In1	REAL	Float	
Gain1	REAL	Float	
Select1	BOOL	Decimal	
In2	REAL	Float	
Gain2	REAL	Float	
Select2	BOOL	Decimal	
In3	REAL	Float	
Gain3	REAL	Float	
Select3	BOOL	Decimal	
In4	REAL	Float	
Gain4	REAL	Float	
Select4	BOOL	Decimal	
In5	REAL	Float	
Gain5	REAL	Float	
Select5	BOOL	Decimal	
In6	REAL	Float	
Gain6	REAL	Float	
Select6	BOOL	Decimal	
In7	REAL	Float	
Gain7	REAL	Float	
Select7	BOOL	Decimal	
In8	REAL	Float	
Gain8	REAL	Float	
Select8	BOOL	Decimal	
Bias	REAL	Float	
EnableOut	BOOL	Decimal	
Out	REAL	Float	

Data type Name: SELECT_ENHANCED

Description:

Size: 64 byte(s)

Name	Data Type	Style	Description
EnableIn	BOOL	Decimal	
In1	REAL	Float	
In2	REAL	Float	
In3	REAL	Float	
In4	REAL	Float	
In5	REAL	Float	
In6	REAL	Float	
In1Fault	BOOL	Decimal	
In2Fault	BOOL	Decimal	
In3Fault	BOOL	Decimal	
In4Fault	BOOL	Decimal	
In5Fault	BOOL	Decimal	
In6Fault	BOOL	Decimal	
InsUsed	DINT	Decimal	
SelectorMode	DINT	Decimal	
ProgSelector	DINT	Decimal	
OperSelector	DINT	Decimal	
ProgProgReq	BOOL	Decimal	
ProgOperReq	BOOL	Decimal	
ProgOverrideReq	BOOL	Decimal	
OperProgReq	BOOL	Decimal	
OperOperReq	BOOL	Decimal	
ProgValueReset	BOOL	Decimal	
EnableOut	BOOL	Decimal	
Out	REAL	Float	
SelectedIn	DINT	Decimal	
ProgOper	BOOL	Decimal	
Override	BOOL	Decimal	
Status	DINT	Hex	
InstructFault	BOOL	Decimal	
InsFaulted	BOOL	Decimal	
InsUsedInv	BOOL	Decimal	
SelectorModeInv	BOOL	Decimal	
ProgSelectorInv	BOOL	Decimal	
OperSelectorInv	BOOL	Decimal	

Data type Name: SERIAL_PORT_CONTROL

Description:

Size: 16 byte(s)

Name	Data Type	Style	Description
LEN	DINT	Decimal	
POS	DINT	Decimal	
ERROR	DINT	Hex	
EN	BOOL	Decimal	
EU	BOOL	Decimal	
DN	BOOL	Decimal	
EM	BOOL	Decimal	
ER	BOOL	Decimal	
UL	BOOL	Decimal	
RN	BOOL	Decimal	
FD	BOOL	Decimal	

Data type Name: SFC_ACTION

Description:

Size: 16 byte(s)

Name	Data Type	Style	Description
Status	DINT	Hex	
A	BOOL	Decimal	
Q	BOOL	Decimal	
PauseTimer	BOOL	Decimal	
PRE	DINT	Decimal	
T	DINT	Decimal	
Count	DINT	Decimal	

Data type Name: SFC_STEP

Description:

Size: 28 byte(s)

Name	Data Type	Style	Description
Status	DINT	Hex	
X	BOOL	Decimal	
FS	BOOL	Decimal	
SA	BOOL	Decimal	
LS	BOOL	Decimal	
DN	BOOL	Decimal	
OV	BOOL	Decimal	
AlarmEn	BOOL	Decimal	
AlarmLow	BOOL	Decimal	
AlarmHigh	BOOL	Decimal	
Reset	BOOL	Decimal	
PauseTimer	BOOL	Decimal	
PRE	DINT	Decimal	
T	DINT	Decimal	
TMax	DINT	Decimal	
Count	DINT	Decimal	
LimitLow	DINT	Decimal	
LimitHigh	DINT	Decimal	

Data type Name: SFC_STOP

Description:

Size: 20 byte(s)

Name	Data Type	Style	Description
Status	DINT	Hex	
X	BOOL	Decimal	
Reset	BOOL	Decimal	
Count	DINT	Decimal	

Data type Name: SPLIT_RANGE

Description:

Size: 108 byte(s)

Name	Data Type	Style	Description
EnableIn	BOOL	Decimal	
In	REAL	Float	
CycleTime	REAL	Float	
MaxHeatIn	REAL	Float	
MinHeatIn	REAL	Float	
MaxCoolIn	REAL	Float	
MinCoolIn	REAL	Float	
MaxHeatTime	REAL	Float	
MinHeatTime	REAL	Float	
MaxCoolTime	REAL	Float	
MinCoolTime	REAL	Float	
EnableOut	BOOL	Decimal	
HeatOut	BOOL	Decimal	
CoolOut	BOOL	Decimal	
HeatTimePercent	REAL	Float	
CoolTimePercent	REAL	Float	
Status	DINT	Hex	
InstructFault	BOOL	Decimal	
CycleTimeInv	BOOL	Decimal	
MaxHeatTimeInv	BOOL	Decimal	
MinHeatTimeInv	BOOL	Decimal	
MaxCoolTimeInv	BOOL	Decimal	
MinCoolTimeInv	BOOL	Decimal	
HeatSpanInv	BOOL	Decimal	
CoolSpanInv	BOOL	Decimal	

Data type Name: S_CURVE

Description:

Size: 120 byte(s)

Name	Data Type	Style	Description
EnableIn	BOOL	Decimal	
In	REAL	Float	
Initialize	BOOL	Decimal	
InitialValue	REAL	Float	
AbsAlgRamp	BOOL	Decimal	
AccelRate	REAL	Float	
DecelRate	REAL	Float	
JerkRate	REAL	Float	
HoldMode	BOOL	Decimal	
HoldEnable	BOOL	Decimal	
TimingMode	DINT	Decimal	
OversampleDT	REAL	Float	
RTSTime	DINT	Decimal	
RTSTimeStamp	DINT	Decimal	
EnableOut	BOOL	Decimal	
S_Mode	BOOL	Decimal	
Out	REAL	Float	
Rate	REAL	Float	
DeltaT	REAL	Float	
Status	DINT	Hex	
InstructFault	BOOL	Decimal	
AccelRateInv	BOOL	Decimal	
DecelRateInv	BOOL	Decimal	
JerkRateInv	BOOL	Decimal	
TimingModeInv	BOOL	Decimal	
RTSMissed	BOOL	Decimal	
RTSTimeInv	BOOL	Decimal	
RTSTimeStampInv	BOOL	Decimal	
DeltaTInv	BOOL	Decimal	

Data type Name: THRS_ENHANCED

Description:

Size: 92 byte(s)

Name	Data Type	Style	Description
EnableIn	BOOL	Decimal	
Enable	BOOL	Decimal	
Disconnected	BOOL	Decimal	
RightButtonNormallyOpen	BOOL	Decimal	
RightButtonNormallyClosed	BOOL	Decimal	
LeftButtonNormallyOpen	BOOL	Decimal	
LeftButtonNormallyClosed	BOOL	Decimal	
InputStatus	BOOL	Decimal	
Reset	BOOL	Decimal	
DiscrepancyTime	DINT	Decimal	
EnableOut	BOOL	Decimal	
O1	BOOL	Decimal	
FP	BOOL	Decimal	
BR	BOOL	Decimal	
SB	BOOL	Decimal	
FaultCode	DINT	Decimal	
DiagnosticCode	DINT	Decimal	

Data type Name: TIMER

Description:

Size: 12 byte(s)

Name	Data Type	Style	Description
PRE	DINT	Decimal	
ACC	DINT	Decimal	
EN	BOOL	Decimal	
TT	BOOL	Decimal	
DN	BOOL	Decimal	

Data type Name: TOTALIZER

Description:

Size: 116 byte(s)

Name	Data Type	Style	Description
EnableIn	BOOL	Decimal	
In	REAL	Float	
InFault	BOOL	Decimal	
TimeBase	DINT	Decimal	
Gain	REAL	Float	
ResetValue	REAL	Float	
Target	REAL	Float	
TargetDev1	REAL	Float	
TargetDev2	REAL	Float	
LowInCutoff	REAL	Float	
ProgProgReq	BOOL	Decimal	
ProgOperReq	BOOL	Decimal	
ProgStartReq	BOOL	Decimal	
ProgStopReq	BOOL	Decimal	
ProgResetReq	BOOL	Decimal	
OperProgReq	BOOL	Decimal	
OperOperReq	BOOL	Decimal	
OperStartReq	BOOL	Decimal	
OperStopReq	BOOL	Decimal	
OperResetReq	BOOL	Decimal	
ProgValueReset	BOOL	Decimal	
TimingMode	DINT	Decimal	
OversampleDT	REAL	Float	
RTSTime	DINT	Decimal	
RTSTimeStamp	DINT	Decimal	
EnableOut	BOOL	Decimal	
Total	REAL	Float	
OldTotal	REAL	Float	
ProgOper	BOOL	Decimal	
RunStop	BOOL	Decimal	
ProgResetDone	BOOL	Decimal	
TargetFlag	BOOL	Decimal	
TargetDev1Flag	BOOL	Decimal	
TargetDev2Flag	BOOL	Decimal	
LowInCutoffFlag	BOOL	Decimal	
DeltaT	REAL	Float	
Status	DINT	Hex	
InstructFault	BOOL	Decimal	

Name	Data Type	Style	Description
InFaulted	BOOL	Decimal	
TimeBaseInv	BOOL	Decimal	
TimingModeInv	BOOL	Decimal	
RTSMissed	BOOL	Decimal	
RTSTimeInv	BOOL	Decimal	
RTSTimeStampInv	BOOL	Decimal	
DeltaTInv	BOOL	Decimal	

Data type Name: TWO_HAND_RUN_STATION

Description:

Size: 48 byte(s)

Name	Data Type	Style	Description
EnableIn	BOOL	Decimal	
ActivePinType	BOOL	Decimal	
ActivePin	BOOL	Decimal	
RightButtonNormallyOpen	BOOL	Decimal	
RightButtonNormallyClosed	BOOL	Decimal	
LeftButtonNormallyOpen	BOOL	Decimal	
LeftButtonNormallyClosed	BOOL	Decimal	
FaultReset	BOOL	Decimal	
EnableOut	BOOL	Decimal	
BP	BOOL	Decimal	
SA	BOOL	Decimal	
BT	BOOL	Decimal	
CB	BOOL	Decimal	
SAF	BOOL	Decimal	
RBF	BOOL	Decimal	
LBF	BOOL	Decimal	
FP	BOOL	Decimal	

Data type Name: UP_DOWN_ACCUM

Description:

Size: 32 byte(s)

Name	Data Type	Style	Description
EnableIn	BOOL	Decimal	
Initialize	BOOL	Decimal	
InitialValue	REAL	Float	
InPlus	REAL	Float	
InMinus	REAL	Float	
Hold	BOOL	Decimal	
EnableOut	BOOL	Decimal	
Out	REAL	Float	

Data type Name: AB:1756_DI:C:0

Description:

Size: 32 byte(s)

Name	Data Type	Style	Description
DiagCOSDisable	BOOL	Decimal	
FilterOffOn_0_7	SINT	Decimal	
FilterOnOff_0_7	SINT	Decimal	
FilterOffOn_8_15	SINT	Decimal	
FilterOnOff_8_15	SINT	Decimal	
FilterOffOn_16_23	SINT	Decimal	
FilterOnOff_16_23	SINT	Decimal	
FilterOffOn_24_31	SINT	Decimal	
FilterOnOff_24_31	SINT	Decimal	
COSOnOffEn	DINT	Binary	
COSOffOnEn	DINT	Binary	

Data type Name: AB:1756_DI:I:0

Description:

Size: 8 byte(s)

Name	Data Type	Style	Description
Fault	DINT	Binary	
Data	DINT	Binary	

Data type Name: AB:1756_DO:C:0

Description:

Size: 32 byte(s)

Name	Data Type	Style	Description
ProgToFaultEn	BOOL	Decimal	
FaultMode	DINT	Binary	
FaultValue	DINT	Binary	
ProgMode	DINT	Binary	
ProgValue	DINT	Binary	

Data type Name: AB:1756_DO:I:0

Description:

Size: 8 byte(s)

Name	Data Type	Style	Description
Fault	DINT	Binary	
Data	DINT	Binary	

Data type Name: AB:1756_DO:O:0

Description:

Size: 4 byte(s)

Name	Data Type	Style	Description
Data	DINT	Binary	

Data type Name: AB:1756_MODULE:C:0

Description:

Size: 408 byte(s)

Name	Data Type	Style	Description
Data	SINT[400]	Hex	

Data type Name: AB:1756_MODULE_INT_64Bytes:I:0

Description:

Size: 64 byte(s)

Name	Data Type	Style	Description
Data	INT[32]	Decimal	

Data type Name: AB:1756_MODULE_INT_64Bytes:O:0

Description:

Size: 64 byte(s)

Name	Data Type	Style	Description
Data	INT[32]	Decimal	

Data type Name: AB:1756_MODULE_REAL_44Bytes:I:0

Description:

Size: 44 byte(s)

Name	Data Type	Style	Description
Data	REAL[11]	Float	

Data type Name: AB:1756_MODULE_REAL_4Bytes:O:0

Description:

Size: 4 byte(s)

Name	Data Type	Style	Description
Data	REAL[1]	Float	

Data type Name: AB:1756_NIO_Struct:C:0

Description:

Size: 44 byte(s)

Name	Data Type	Style	Description
HoldForInit	BOOL	Decimal	
AlarmDisable	BOOL	Decimal	
RampAlarmLatch	BOOL	Decimal	
LimitAlarmLatch	BOOL	Decimal	
FaultMode	BOOL	Decimal	
ProgMode	BOOL	Decimal	
RampToRun	BOOL	Decimal	
RampToProg	BOOL	Decimal	
RampToFault	BOOL	Decimal	
RangeType	INT	Decimal	
MaxRampRate	REAL	Float	
FaultValue	REAL	Float	
ProgValue	REAL	Float	
LowSignal	REAL	Float	
HighSignal	REAL	Float	
LowEngineering	REAL	Float	
HighEngineering	REAL	Float	
LowLimit	REAL	Float	
HighLimit	REAL	Float	
CalBias	REAL	Float	

Data type Name: AB:1756_OF4_Float:C:0

Description:

Size: 188 byte(s)

Name	Data Type	Style	Description
ProgToFaultEn	BOOL	Decimal	
Ch0Config	AB:1756_NIO_Struct:C:0		
HoldForInit	BOOL	Decimal	
AlarmDisable	BOOL	Decimal	
RampAlarmLatch	BOOL	Decimal	
LimitAlarmLatch	BOOL	Decimal	
FaultMode	BOOL	Decimal	
ProgMode	BOOL	Decimal	
RampToRun	BOOL	Decimal	
RampToProg	BOOL	Decimal	
RampToFault	BOOL	Decimal	
RangeType	INT	Decimal	
MaxRampRate	REAL	Float	
FaultValue	REAL	Float	
ProgValue	REAL	Float	
LowSignal	REAL	Float	
HighSignal	REAL	Float	
LowEngineering	REAL	Float	
HighEngineering	REAL	Float	
LowLimit	REAL	Float	
HighLimit	REAL	Float	
CalBias	REAL	Float	
Ch1Config	AB:1756_NIO_Struct:C:0		
HoldForInit	BOOL	Decimal	
AlarmDisable	BOOL	Decimal	
RampAlarmLatch	BOOL	Decimal	
LimitAlarmLatch	BOOL	Decimal	
FaultMode	BOOL	Decimal	
ProgMode	BOOL	Decimal	
RampToRun	BOOL	Decimal	
RampToProg	BOOL	Decimal	
RampToFault	BOOL	Decimal	
RangeType	INT	Decimal	
MaxRampRate	REAL	Float	
FaultValue	REAL	Float	
ProgValue	REAL	Float	
LowSignal	REAL	Float	
HighSignal	REAL	Float	

Name	Data Type	Style	Description
LowEngineering	REAL	Float	
HighEngineering	REAL	Float	
LowLimit	REAL	Float	
HighLimit	REAL	Float	
CalBias	REAL	Float	
Ch2Config	AB:1756_NIO_Struct:C:0		
HoldForInit	BOOL	Decimal	
AlarmDisable	BOOL	Decimal	
RampAlarmLatch	BOOL	Decimal	
LimitAlarmLatch	BOOL	Decimal	
FaultMode	BOOL	Decimal	
ProgMode	BOOL	Decimal	
RampToRun	BOOL	Decimal	
RampToProg	BOOL	Decimal	
RampToFault	BOOL	Decimal	
RangeType	INT	Decimal	
MaxRampRate	REAL	Float	
FaultValue	REAL	Float	
ProgValue	REAL	Float	
LowSignal	REAL	Float	
HighSignal	REAL	Float	
LowEngineering	REAL	Float	
HighEngineering	REAL	Float	
LowLimit	REAL	Float	
HighLimit	REAL	Float	
CalBias	REAL	Float	
Ch3Config	AB:1756_NIO_Struct:C:0		
HoldForInit	BOOL	Decimal	
AlarmDisable	BOOL	Decimal	
RampAlarmLatch	BOOL	Decimal	
LimitAlarmLatch	BOOL	Decimal	
FaultMode	BOOL	Decimal	
ProgMode	BOOL	Decimal	
RampToRun	BOOL	Decimal	
RampToProg	BOOL	Decimal	
RampToFault	BOOL	Decimal	
RangeType	INT	Decimal	
MaxRampRate	REAL	Float	

Name	Data Type	Style	Description
FaultValue	REAL	Float	
ProgValue	REAL	Float	
LowSignal	REAL	Float	
HighSignal	REAL	Float	
LowEngineering	REAL	Float	
HighEngineering	REAL	Float	
LowLimit	REAL	Float	
HighLimit	REAL	Float	
CalBias	REAL	Float	

Data type Name: AB:1756_OF4_Float:I:0

Description:

Size: 28 byte(s)

Name	Data Type	Style	Description
ChannelFaults	INT	Binary	
Ch0Fault	BOOL	Decimal	
Ch1Fault	BOOL	Decimal	
Ch2Fault	BOOL	Decimal	
Ch3Fault	BOOL	Decimal	
ModuleFaults	INT	Binary	
AnalogGroupFault	BOOL	Decimal	
Calibrating	BOOL	Decimal	
CalFault	BOOL	Decimal	
Ch0Status	SINT	Binary	
Ch0OpenWire	BOOL	Decimal	
Ch0NotANumber	BOOL	Decimal	
Ch0CalFault	BOOL	Decimal	
Ch0InHold	BOOL	Decimal	
Ch0RampAlarm	BOOL	Decimal	
Ch0LLimitAlarm	BOOL	Decimal	
Ch0HLimitAlarm	BOOL	Decimal	
Ch1Status	SINT	Binary	
Ch1OpenWire	BOOL	Decimal	
Ch1NotANumber	BOOL	Decimal	
Ch1CalFault	BOOL	Decimal	
Ch1InHold	BOOL	Decimal	
Ch1RampAlarm	BOOL	Decimal	
Ch1LLimitAlarm	BOOL	Decimal	
Ch1HLimitAlarm	BOOL	Decimal	
Ch2Status	SINT	Binary	
Ch2OpenWire	BOOL	Decimal	
Ch2NotANumber	BOOL	Decimal	
Ch2CalFault	BOOL	Decimal	
Ch2InHold	BOOL	Decimal	
Ch2RampAlarm	BOOL	Decimal	
Ch2LLimitAlarm	BOOL	Decimal	
Ch2HLimitAlarm	BOOL	Decimal	
Ch3Status	SINT	Binary	
Ch3OpenWire	BOOL	Decimal	
Ch3NotANumber	BOOL	Decimal	
Ch3CalFault	BOOL	Decimal	
Ch3InHold	BOOL	Decimal	

Name	Data Type	Style	Description
Ch3RampAlarm	BOOL	Decimal	
Ch3LLimitAlarm	BOOL	Decimal	
Ch3HLimitAlarm	BOOL	Decimal	
Ch0Data	REAL	Float	
Ch1Data	REAL	Float	
Ch2Data	REAL	Float	
Ch3Data	REAL	Float	
RollingTimestamp	INT	Decimal	

Data type Name: AB:1756_OF4_Float:O:0

Description:

Size: 16 byte(s)

Name	Data Type	Style	Description
Ch0Data	REAL	Float	
Ch1Data	REAL	Float	
Ch2Data	REAL	Float	
Ch3Data	REAL	Float	

Data type Name: AB:CONTROLNET_MODULE:C:0

Description:

Size: 408 byte(s)

Name	Data Type	Style	Description
Data	SINT[400]	Hex	

Data type Name: AB:CONTROLNET_MODULE_INT_8Bytes:I:0

Description:

Size: 8 byte(s)

Name	Data Type	Style	Description
Data	INT[4]	Decimal	

Data type Name: AB:CONTROLNET_MODULE_INT_8Bytes:O:0

Description:

Size: 8 byte(s)

Name	Data Type	Style	Description
Data	INT[4]	Decimal	

Data type Name: AB:ETHERNET_MODULE:C:0

Description:

Size: 408 byte(s)

Name	Data Type	Style	Description
Data	SINT[400]	Hex	

Data type Name: AB:ETHERNET_MODULE_INT_250Bytes:I:0

Description:

Size: 252 byte(s)

Name	Data Type	Style	Description
Data	INT[125]	Decimal	

Data type Name: AB:ETHERNET_MODULE_INT_250Bytes:O:0

Description:

Size: 252 byte(s)

Name	Data Type	Style	Description
Data	INT[125]	Decimal	

Data type Name: AB:ETHERNET_MODULE_SINT_24Bytes:I:0

Description:

Size: 24 byte(s)

Name	Data Type	Style	Description
Data	SINT[24]	Decimal	

Data type Name: AB:ETHERNET_MODULE_SINT_24Bytes:O:0

Description:

Size: 24 byte(s)

Name	Data Type	Style	Description
Data	SINT[24]	Decimal	

Data type Name: AB:ETHERNET_MODULE_SINT_256Bytes:I:0

Description:

Size: 256 byte(s)

Name	Data Type	Style	Description
Data	SINT[256]	Decimal	

Data type Name: AB:ETHERNET_MODULE_SINT_256Bytes:O:0

Description:

Size: 256 byte(s)

Name	Data Type	Style	Description
Data	SINT[256]	Decimal	

Data type Name: HI:1756_1FC:C:0

Description:

Size: 208 byte(s)

Name	Data Type	Style	Description
Ch0Format	DINT	Hex	
Ch0ChanActive	DINT	Decimal	
Ch0Metric	DINT	Decimal	
Ch0SpanWeight	DINT	Decimal	
Ch0CalLowWeight	DINT	Decimal	
Ch0ROCTimeBase	DINT	Decimal	
Ch0ROCTimeUnits	DINT	Decimal	
Ch0NumAverages	DINT	Decimal	
Ch0Waversaver	DINT	Decimal	
Ch0PID_P	DINT	Decimal	
Ch0PID_I	DINT	Decimal	
Ch0BatchAmount	DINT	Decimal	
Ch0Preact	DINT	Decimal	
Ch0Mode	DINT	Decimal	
Ch0PrimeTime	DINT	Decimal	
Ch0PauseTime	DINT	Decimal	
Ch0FeedTime	DINT	Decimal	
Ch0InitialRefillOn	DINT	Decimal	
Ch0AutoRefillOn	DINT	Decimal	
Ch0RefillStartWeight	DINT	Decimal	
Ch0RefillEndWeight	DINT	Decimal	
Ch0RefillTooHighWeight	DINT	Decimal	
Ch0RefillShutdownWeight	DINT	Decimal	
Ch0OpAdjust	DINT	Decimal	
Ch0OpAdjustPerCent	DINT	Decimal	
Ch0WaitTime	DINT	Decimal	
Ch0RECLevel	DINT	Decimal	
Ch0RECTime	DINT	Decimal	
Ch0RECShutdown	DINT	Decimal	
Ch0ShutoffLoPerCent	DINT	Decimal	
Ch0Total	DINT	Decimal	
Ch0BatchTotal	DINT	Decimal	
Ch0LowAlarmShutDownRate	DINT	Decimal	
Ch0HighAlarmShutDownRate	DINT	Decimal	
Ch0AlarmDelay	DINT	Decimal	
Ch0RateSetPoint	DINT	Decimal	
Ch0PTermLimit	DINT	Decimal	
Ch0spares37	DINT	Decimal	

Name	Data Type	Style	Description
Ch0spares38	DINT	Decimal	
Ch0spares39	DINT	Decimal	
Ch0spares40	DINT	Decimal	
Ch0spares41	DINT	Decimal	
Ch0spares42	DINT	Decimal	
Ch0spares43	DINT	Decimal	
Ch0spares44	DINT	Decimal	
Ch0spares45	DINT	Decimal	
Ch0spares46	DINT	Decimal	
Ch0spares47	DINT	Decimal	
Ch0spares48	DINT	Decimal	
Ch0spares49	DINT	Decimal	

Data type Name: HI:1756_2FC:I:0

Description:

Size: 64 byte(s)

Name	Data Type	Style	Description
Ch0	HI:1756_FC_Channel:I:0		
Command	INT	Hex	
CmdStatus	INT	Decimal	
ParamVal	DINT	Decimal	
ParamNumber	INT	Decimal	
OP	INT	Decimal	
ROC	DINT	Decimal	
GROSS	DINT	Decimal	
Setpoint	DINT	Decimal	
ControllerState	INT	Decimal	
Version_Minor	SINT	Decimal	
Version_Major	SINT	Decimal	
ControllerStatus	INT	Binary	
ErrorAdConvert	BOOL	Decimal	
ErrorAdFailure	BOOL	Decimal	
StatusOn	BOOL	Decimal	
ErrorLowAlarm	BOOL	Decimal	
ErrorHighAlarm	BOOL	Decimal	
ErroRControlLost	BOOL	Decimal	
ErrorShutdown	BOOL	Decimal	
ErrorRange	BOOL	Decimal	
ErrorRec	BOOL	Decimal	
ErrorRecMinus	BOOL	Decimal	
ErrorRefillOver	BOOL	Decimal	
StatusRefill	BOOL	Decimal	
StatusBatchComplete	BOOL	Decimal	
ErrorEEpromWrite	BOOL	Decimal	
StatusChanEnabled	BOOL	Decimal	
Counter	INT	Decimal	
Ch1	HI:1756_FC_Channel:I:0		
Command	INT	Hex	
CmdStatus	INT	Decimal	
ParamVal	DINT	Decimal	
ParamNumber	INT	Decimal	
OP	INT	Decimal	
ROC	DINT	Decimal	
GROSS	DINT	Decimal	
Setpoint	DINT	Decimal	

Name	Data Type	Style	Description
ControllerState	INT	Decimal	
Version_Minor	SINT	Decimal	
Version_Major	SINT	Decimal	
ControllerStatus	INT	Binary	
ErrorAdConvert	BOOL	Decimal	
ErrorAdFailure	BOOL	Decimal	
StatusOn	BOOL	Decimal	
ErrorLowAlarm	BOOL	Decimal	
ErrorHighAlarm	BOOL	Decimal	
ErroRControlLost	BOOL	Decimal	
ErrorShutdown	BOOL	Decimal	
ErrorRange	BOOL	Decimal	
ErrorRec	BOOL	Decimal	
ErrorRecMinus	BOOL	Decimal	
ErrorRefillOver	BOOL	Decimal	
StatusRefill	BOOL	Decimal	
StatusBatchComplete	BOOL	Decimal	
ErrorEEpromWrite	BOOL	Decimal	
StatusChanEnabled	BOOL	Decimal	
Counter	INT	Decimal	

Data type Name: HI:1756_2FC:O:0

Description:

Size: 64 byte(s)

Name	Data Type	Style	Description
Ch0	HI:1756_FC_Channel:O:0		
Command	INT	Hex	
Format	INT	Hex	
ParamVal	DINT	Decimal	
ParamNumber	INT	Decimal	
reserved06	INT	Decimal	
reserved07	INT	Decimal	
reserved08	INT	Decimal	
reserved09	INT	Decimal	
reserved10	INT	Decimal	
reserved11	INT	Decimal	
reserved12	INT	Decimal	
reserved13	INT	Decimal	
reserved14	INT	Decimal	
reserved15	INT	Decimal	
reserved16	INT	Decimal	
Ch1	HI:1756_FC_Channel:O:0		
Command	INT	Hex	
Format	INT	Hex	
ParamVal	DINT	Decimal	
ParamNumber	INT	Decimal	
reserved06	INT	Decimal	
reserved07	INT	Decimal	
reserved08	INT	Decimal	
reserved09	INT	Decimal	
reserved10	INT	Decimal	
reserved11	INT	Decimal	
reserved12	INT	Decimal	
reserved13	INT	Decimal	
reserved14	INT	Decimal	
reserved15	INT	Decimal	
reserved16	INT	Decimal	

Data type Name: HI:1756_FC_Channel:I:0

Description:

Size: 32 byte(s)

Name	Data Type	Style	Description
Command	INT	Hex	
CmdStatus	INT	Decimal	
ParamVal	DINT	Decimal	
ParamNumber	INT	Decimal	
OP	INT	Decimal	
ROC	DINT	Decimal	
GROSS	DINT	Decimal	
Setpoint	DINT	Decimal	
ControllerState	INT	Decimal	
Version_Minor	SINT	Decimal	
Version_Major	SINT	Decimal	
ControllerStatus	INT	Binary	
ErrorAdConvert	BOOL	Decimal	
ErrorAdFailure	BOOL	Decimal	
StatusOn	BOOL	Decimal	
ErrorLowAlarm	BOOL	Decimal	
ErrorHighAlarm	BOOL	Decimal	
ErroRControlLost	BOOL	Decimal	
ErrorShutdown	BOOL	Decimal	
ErrorRange	BOOL	Decimal	
ErrorRec	BOOL	Decimal	
ErrorRecMinus	BOOL	Decimal	
ErrorRefillOver	BOOL	Decimal	
StatusRefill	BOOL	Decimal	
StatusBatchComplete	BOOL	Decimal	
ErrorEEpromWrite	BOOL	Decimal	
StatusChanEnabled	BOOL	Decimal	
Counter	INT	Decimal	

Data type Name: HI:1756_FC_Channel:O:0

Description:

Size: 32 byte(s)

Name	Data Type	Style	Description
Command	INT	Hex	
Format	INT	Hex	
ParamVal	DINT	Decimal	
ParamNumber	INT	Decimal	
reserved06	INT	Decimal	
reserved07	INT	Decimal	
reserved08	INT	Decimal	
reserved09	INT	Decimal	
reserved10	INT	Decimal	
reserved11	INT	Decimal	
reserved12	INT	Decimal	
reserved13	INT	Decimal	
reserved14	INT	Decimal	
reserved15	INT	Decimal	
reserved16	INT	Decimal	